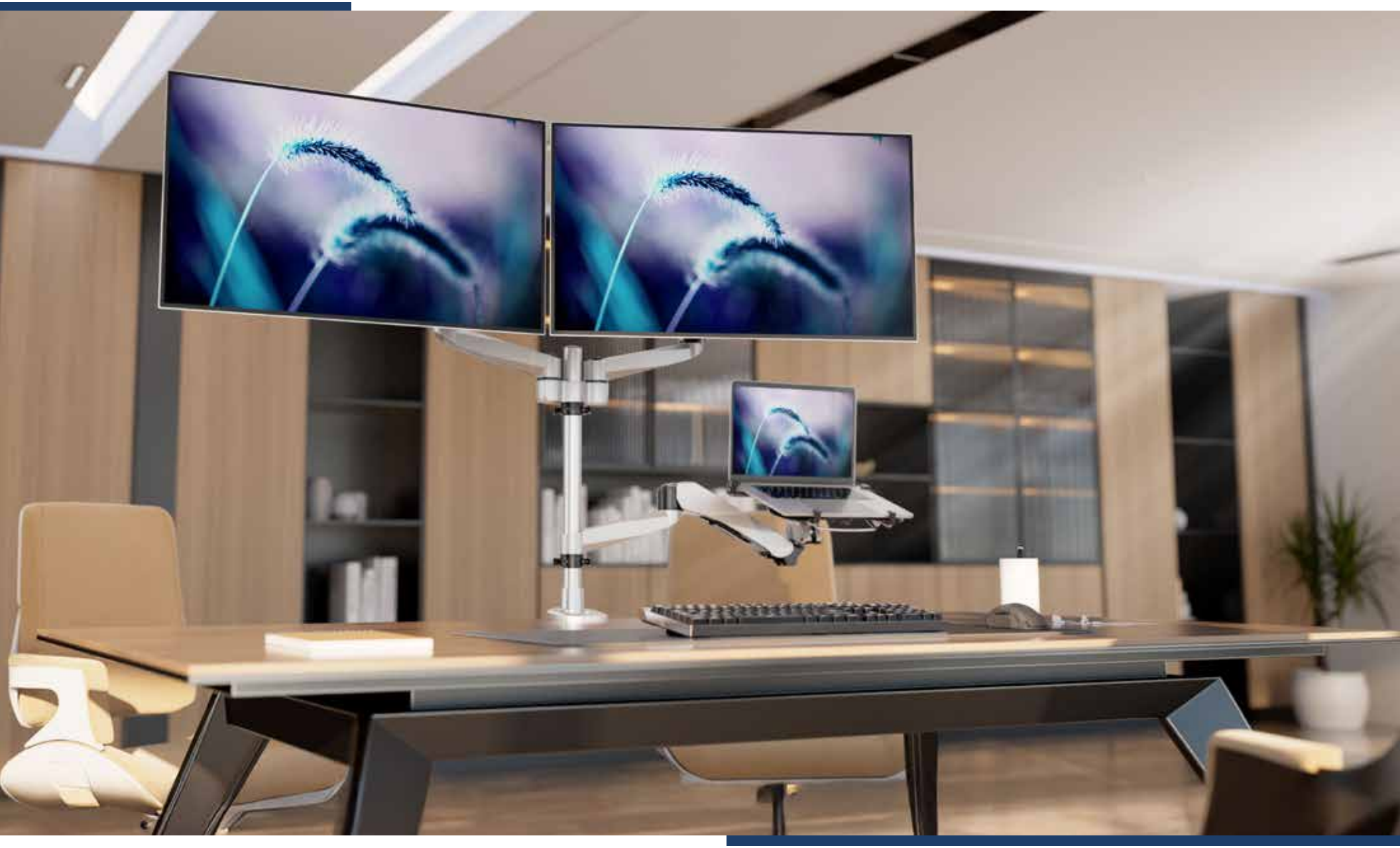

MOUNT-IT! CLiX SERIES

Premium Monitor Mounts

Introducing the CLiX Series – Our finest line of monitor mounts, engineered from premium aluminum for lasting durability, a refined finish, and seamless performance. Built for versatility, CLiX offers a broad range of configurations to fit every workspace — from single monitor setups to quad-screen power stations. Each mount features our signature “click” assembly system, making setup fast and frustration-free.

What truly sets CLiX apart is its universal design language. Whether outfitting a single desk or an entire office floor, the consistent aesthetic ensures a clean, unified look across varied workstation setups. With CLiX, every mount complements the next, offering ergonomic comfort tailored to each user—without sacrificing visual harmony.

Monitor Wall Mounts

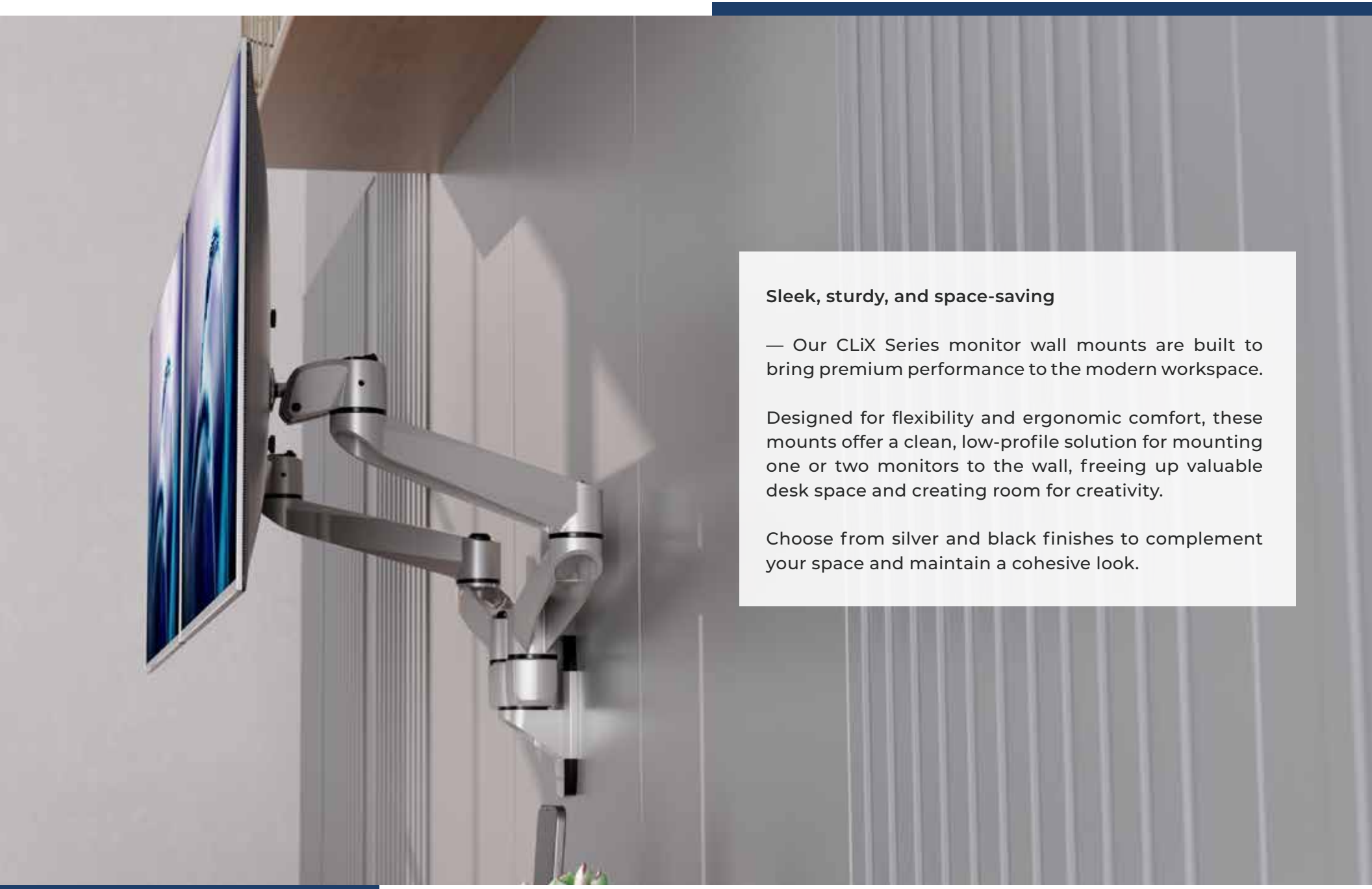

Sleek, sturdy, and space-saving

— Our CLiX Series monitor wall mounts are built to bring premium performance to the modern workspace.

Designed for flexibility and ergonomic comfort, these mounts offer a clean, low-profile solution for mounting one or two monitors to the wall, freeing up valuable desk space and creating room for creativity.

Choose from silver and black finishes to complement your space and maintain a cohesive look.

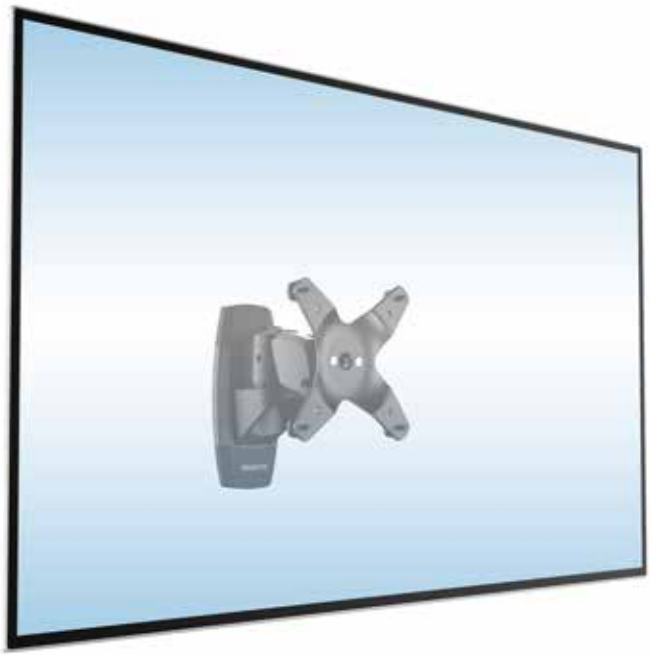

MI-31114 & MI-31114_BLK

Single Monitor Wall Mount

Number of Monitors	1
Max Screen Size	34”
Weight Capacity	30 lbs
VESA Compatibility	75x75, 100x100
Swivel	Up to 180°
Tilt	Up to +90°/-15°
Screen Rotation	360°
Available Colors	

MI-33114 & MI-33114_BLK

Full Motion Single Monitor Wall Mount

Number of Monitors	1
Max Screen Size	34”
Weight Capacity	30 lbs
VESA Compatibility	75x75, 100x100
Swivel	180°
Tilt	+90°/-15°
Screen Rotation	360°
Available Colors	

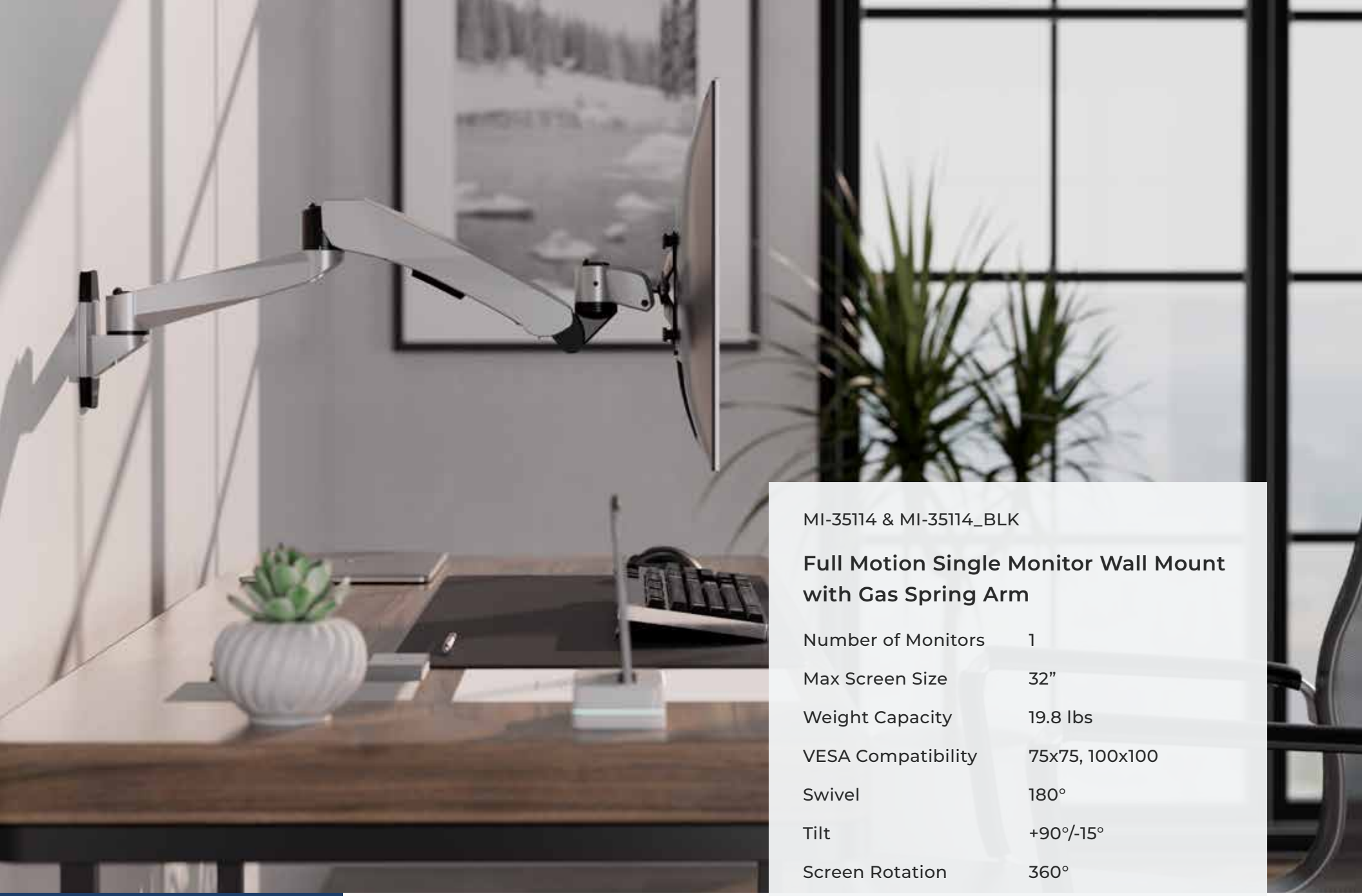

MI-35114 & MI-35114_BLK

Full Motion Single Monitor Wall Mount with Gas Spring Arm

Number of Monitors	1
Max Screen Size	32”
Weight Capacity	19.8 lbs
VESA Compatibility	75x75, 100x100
Swivel	180°
Tilt	+90°/-15°
Screen Rotation	360°
Available Colors	

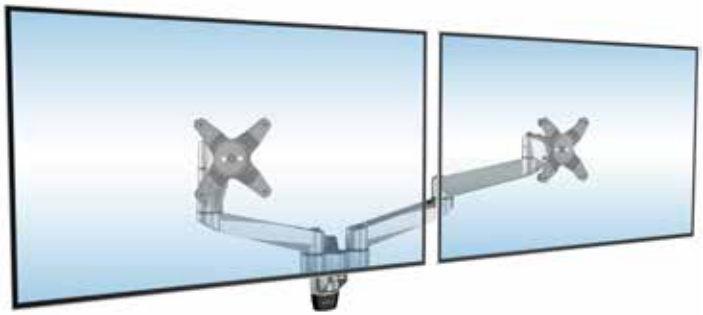

MI-43114 & MI-43114_BLK

Full Motion Dual Monitor Wall Mount

Number of Monitors	2
Max Screen Size	34”
Weight Capacity	22 lbs per arm
VESA Compatibility	75x75, 100x100
Swivel	180°
Tilt	+90°/-15°
Screen Rotation	360°
Available Colors	

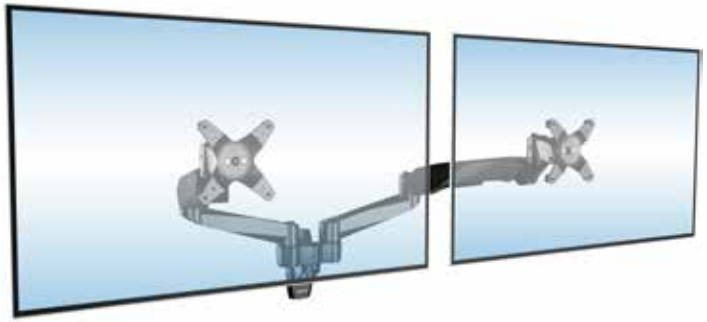

MI-45114 & MI-45114_BLK

Full Motion Dual Monitor Wall Mount with Gas Spring Arms

Number of Monitors	2
Max Screen Size	32”
Weight Capacity	19.8 lbs per arm
VESA Compatibility	75x75, 100x100
Swivel	180°
Tilt	+90°/-15°
Screen Rotation	360°
Available Colors	

Monitor Desk Mounts

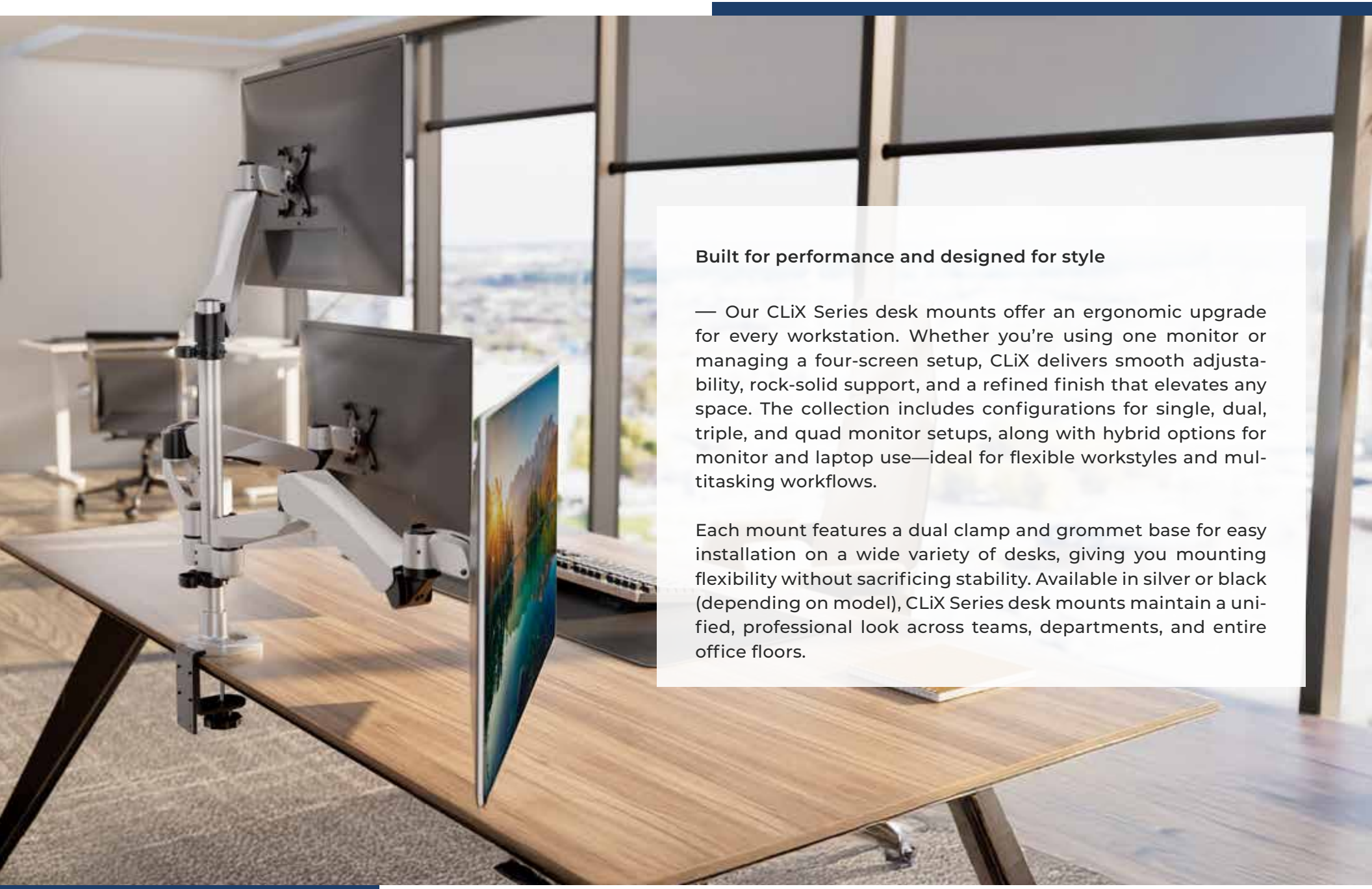

Built for performance and designed for style

— Our CLiX Series desk mounts offer an ergonomic upgrade for every workstation. Whether you're using one monitor or managing a four-screen setup, CLiX delivers smooth adjustability, rock-solid support, and a refined finish that elevates any space. The collection includes configurations for single, dual, triple, and quad monitor setups, along with hybrid options for monitor and laptop use—ideal for flexible workstyles and multitasking workflows.

Each mount features a dual clamp and grommet base for easy installation on a wide variety of desks, giving you mounting flexibility without sacrificing stability. Available in silver or black (depending on model), CLiX Series desk mounts maintain a unified, professional look across teams, departments, and entire office floors.

MI-33116 & 33116-BLK

Full Motion Single Monitor Desk Mount

Number of Monitors	1
Max Screen Size	34”
Weight Capacity	30 lbs
VESA Compatibility	75x75, 100x100
Screen Swivel	180°
Arm Swivel	360°
Screen Rotation	360°
Tilt	+90°/-15°
Pole Length	11.9”
Available Colors	

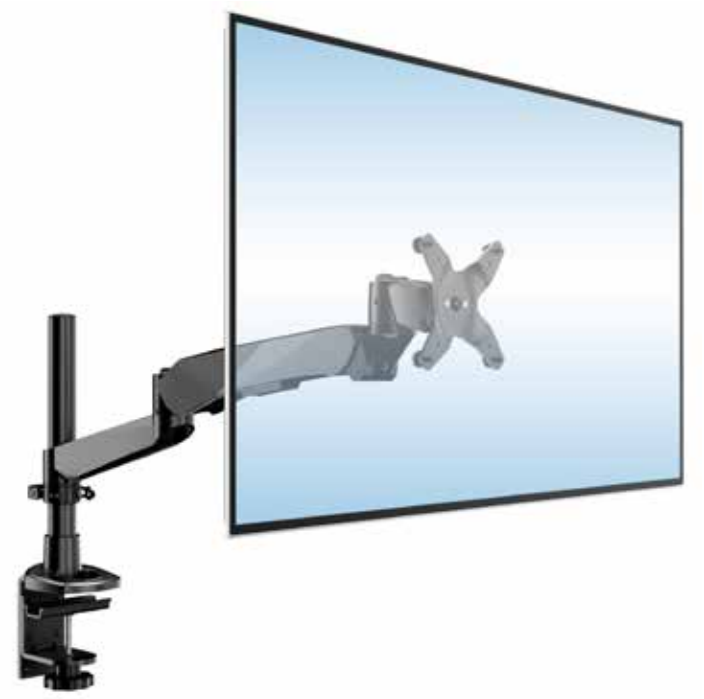

MI-35116 & MI-35116_BLK

Full Motion Single Monitor Desk Mount with Gas Spring Arm

Number of Monitors	1
Max Screen Size	32”
Weight Capacity	19.8 lbs
VESA Compatibility	75x75, 100x100
Screen Swivel	180°
Arm Swivel	360°
Screen Rotation	360°
Tilt	+90°/-15°
Pole Length	11.9”
Available Colors	

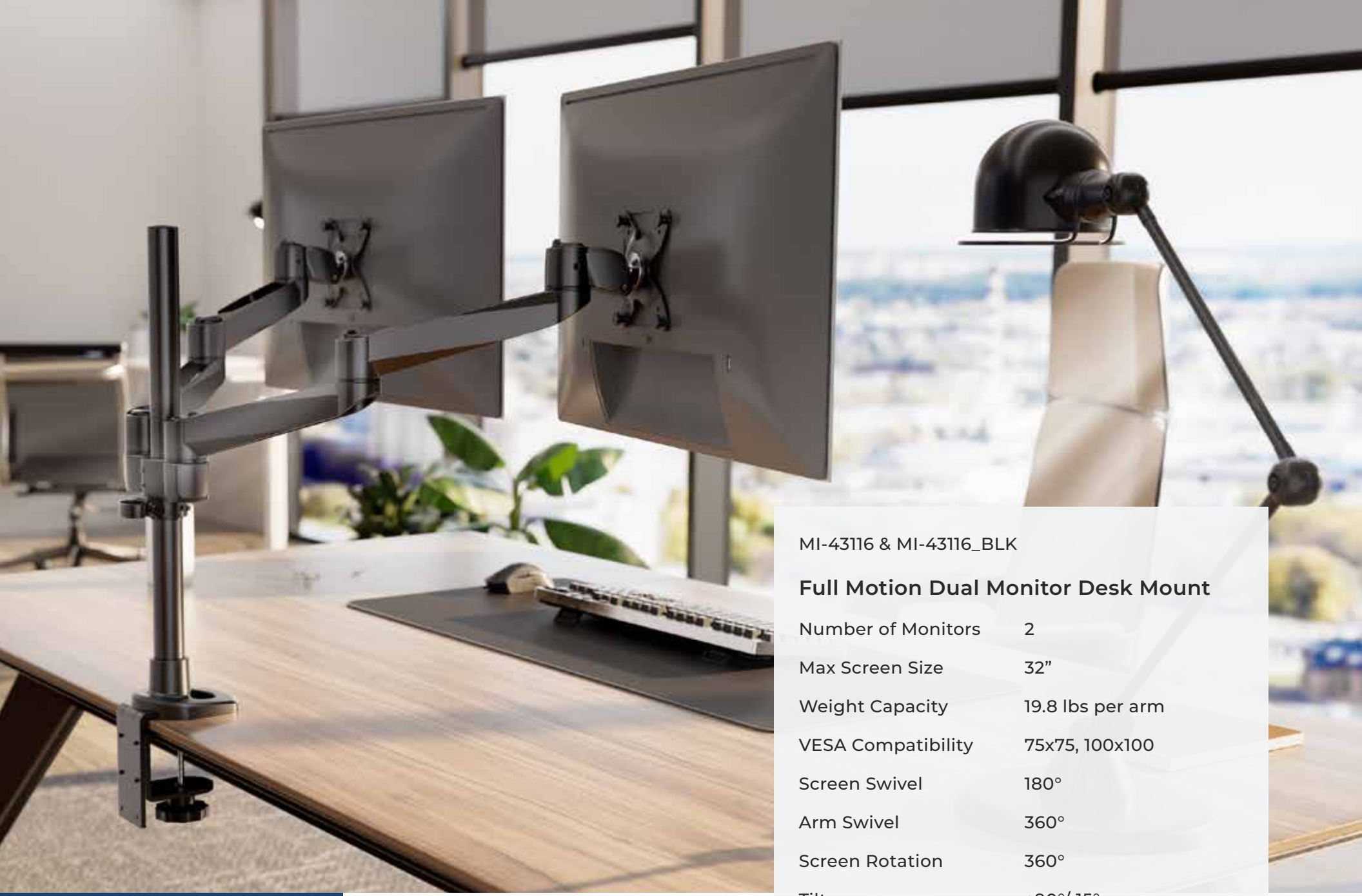

MI-43116 & MI-43116_BLK

Full Motion Dual Monitor Desk Mount

Number of Monitors	2
Max Screen Size	32”
Weight Capacity	19.8 lbs per arm
VESA Compatibility	75x75, 100x100
Screen Swivel	180°
Arm Swivel	360°
Screen Rotation	360°
Tilt	+90°/-15°
Pole Length	19.8”
Available Colors	

MI-45116 & MI-45116_BLK

Full Motion Dual Monitor Desk Mount with Gas Spring Arms

Number of Monitors	2
Max Screen Size	32”
Weight Capacity	19.8 lbs per arm
VESA Compatibility	75x75, 100x100
Screen Swivel	180°
Arm Swivel	360°
Screen Rotation	360°
Tilt	+90°/-15°
Pole Length	19.8”
Available Colors	

MI-75816

Full Motion Single Monitor + Laptop Mount with Gas Spring Arms

Number of Monitors	1
Max Laptop Size	17”
Max Screen Size	32”
Weight Capacity	19.8 lbs per arm
VESA Compatibility	75x75, 100x100
Screen Swivel	180°
Arm Swivel	360°
Screen Rotation	360°
Tilt	+90°/-15°
Pole Length	19.8”
Available Colors	

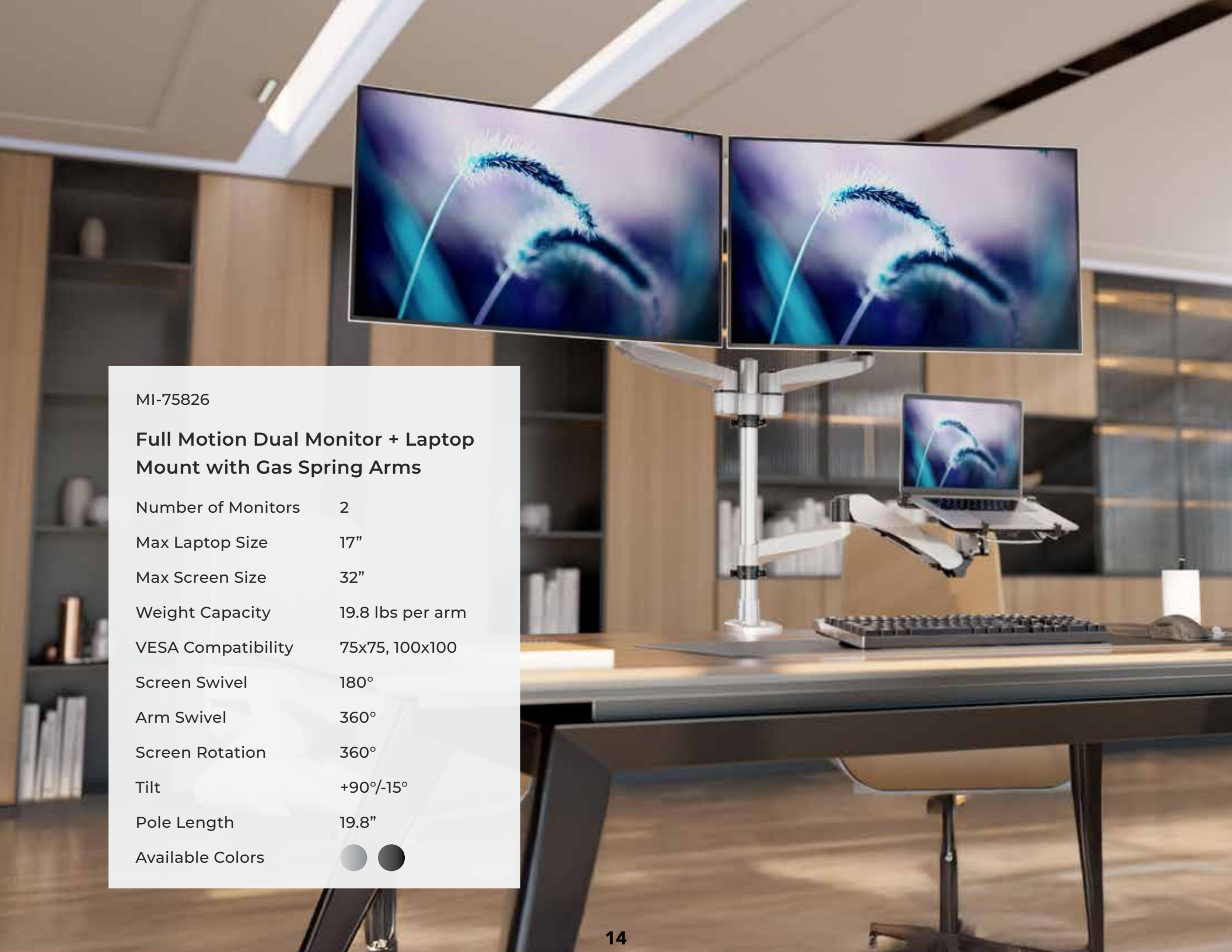

MI-75826

Full Motion Dual Monitor + Laptop Mount with Gas Spring Arms

Number of Monitors	2
Max Laptop Size	17”
Max Screen Size	32”
Weight Capacity	19.8 lbs per arm
VESA Compatibility	75x75, 100x100
Screen Swivel	180°
Arm Swivel	360°
Screen Rotation	360°
Tilt	+90°/-15°
Pole Length	19.8”
Available Colors	

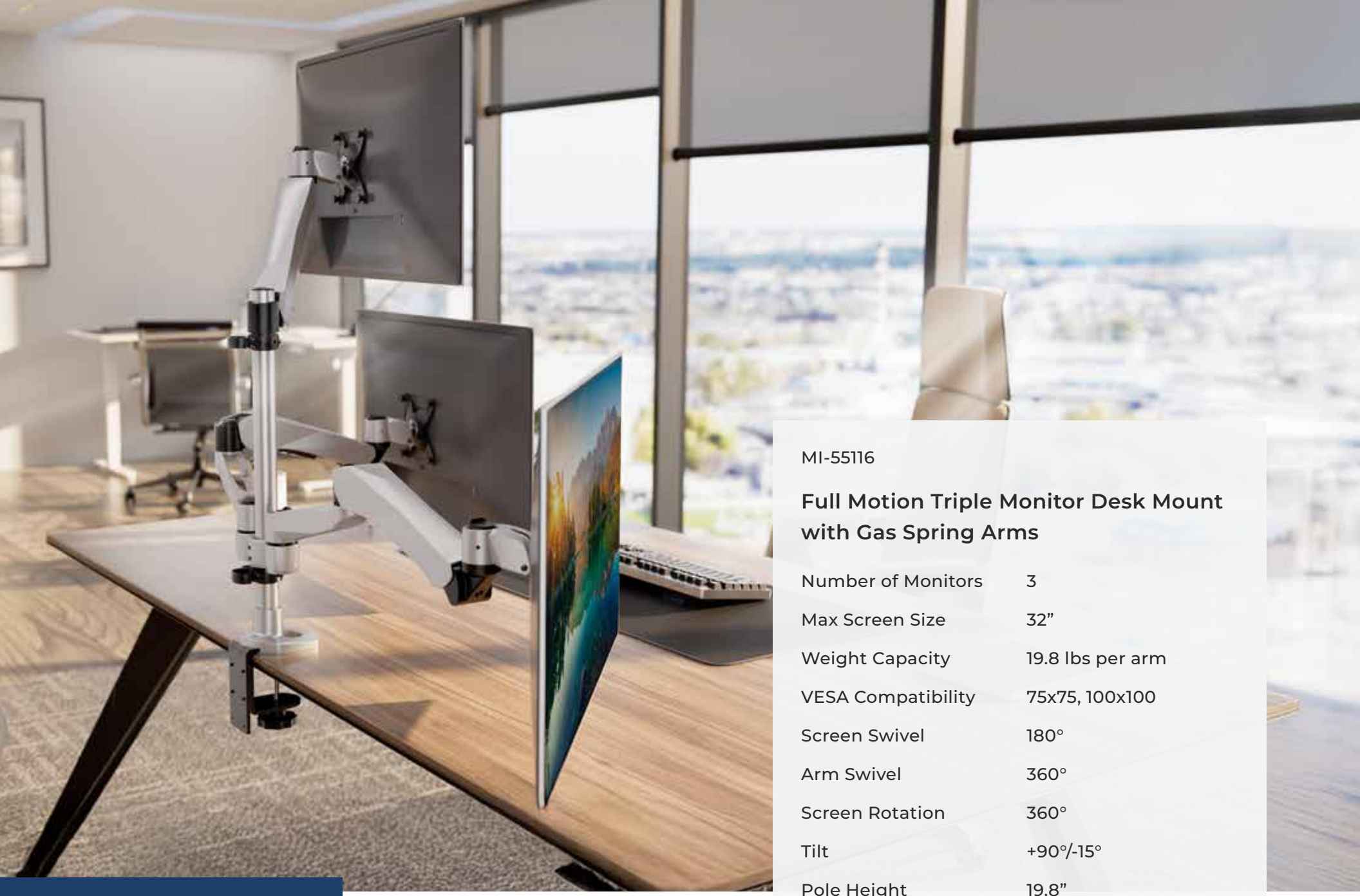

MI-55116

Full Motion Triple Monitor Desk Mount with Gas Spring Arms

Number of Monitors	3
Max Screen Size	32”
Weight Capacity	19.8 lbs per arm
VESA Compatibility	75x75, 100x100
Screen Swivel	180°
Arm Swivel	360°
Screen Rotation	360°
Tilt	+90°/-15°
Pole Height	19.8”
Available Colors	

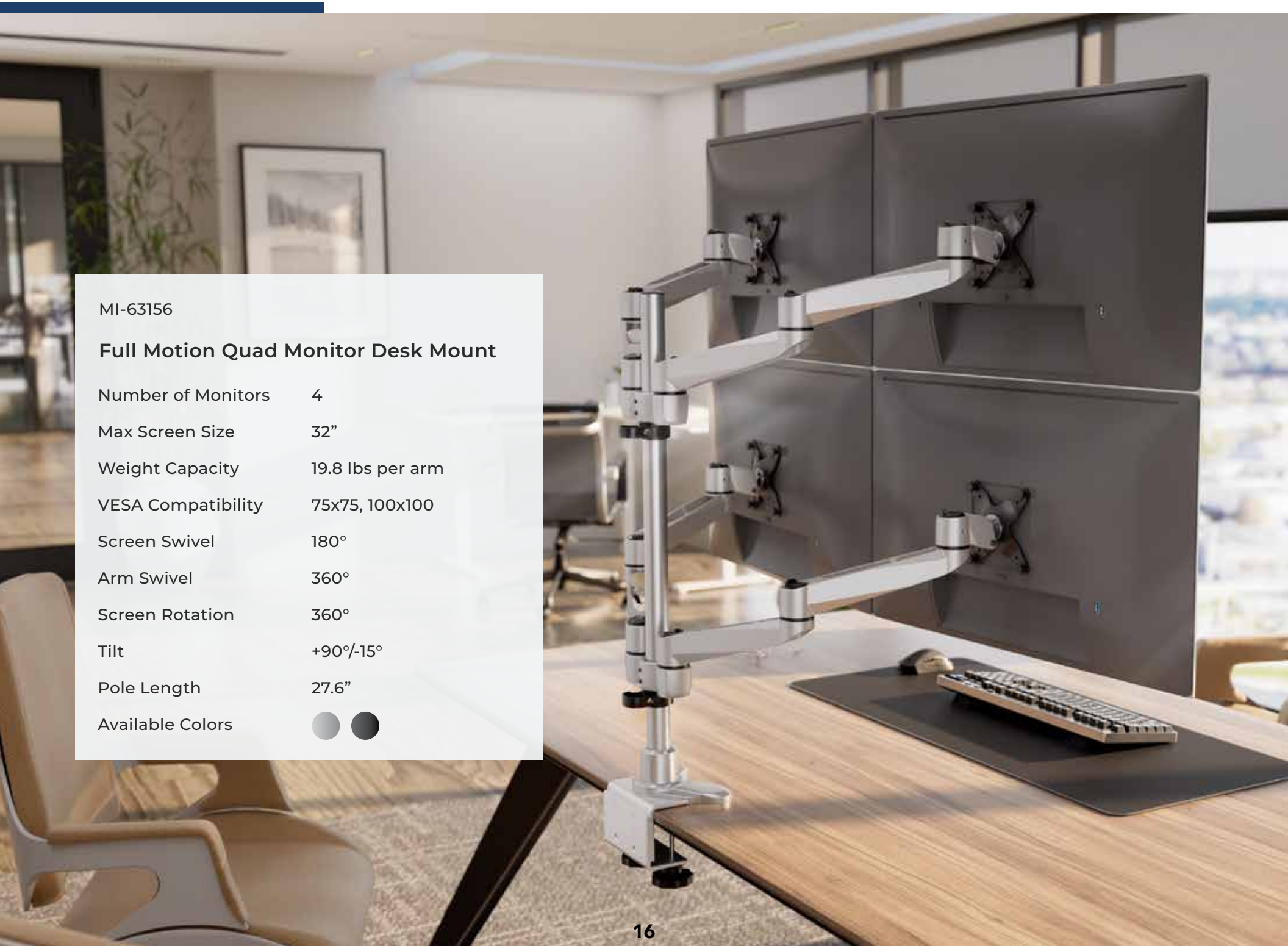

MI-63156

Full Motion Quad Monitor Desk Mount

Number of Monitors	4
Max Screen Size	32”
Weight Capacity	19.8 lbs per arm
VESA Compatibility	75x75, 100x100
Screen Swivel	180°
Arm Swivel	360°
Screen Rotation	360°
Tilt	+90°/-15°
Pole Length	27.6”
Available Colors	

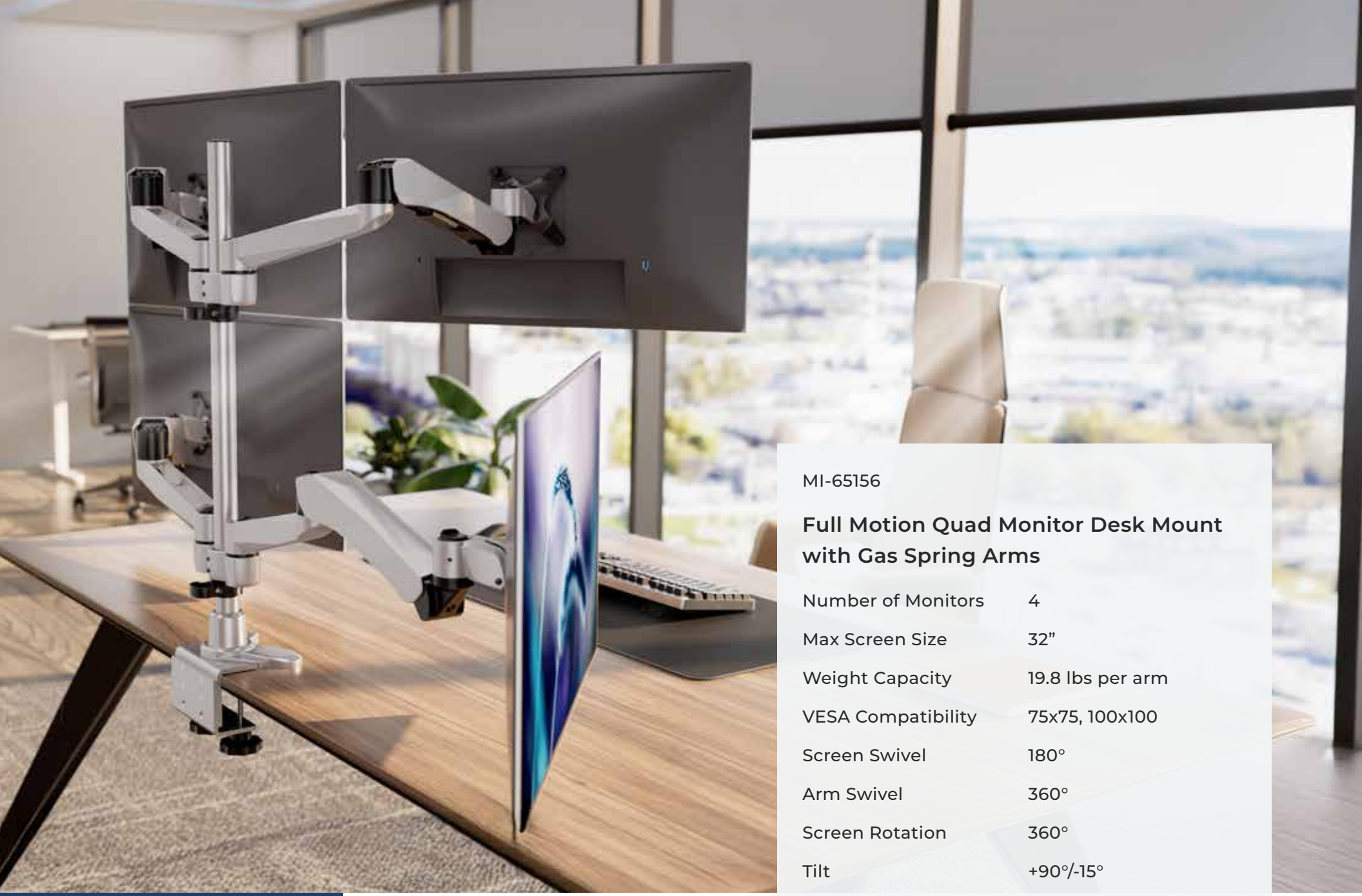

MI-65156

Full Motion Quad Monitor Desk Mount with Gas Spring Arms

Number of Monitors	4
Max Screen Size	32”
Weight Capacity	19.8 lbs per arm
VESA Compatibility	75x75, 100x100
Screen Swivel	180°
Arm Swivel	360°
Screen Rotation	360°
Tilt	+90°/-15°
Pole Length	27.6”
Available Colors	

Easy CLiX Assembly

Assembly is quick and hassle-free with clear instructions included in the box, plus step-by-step installation videos available for every CLiX mount.

Whether you're setting up one workstation or an entire office, we make it easy to get up and running with confidence.

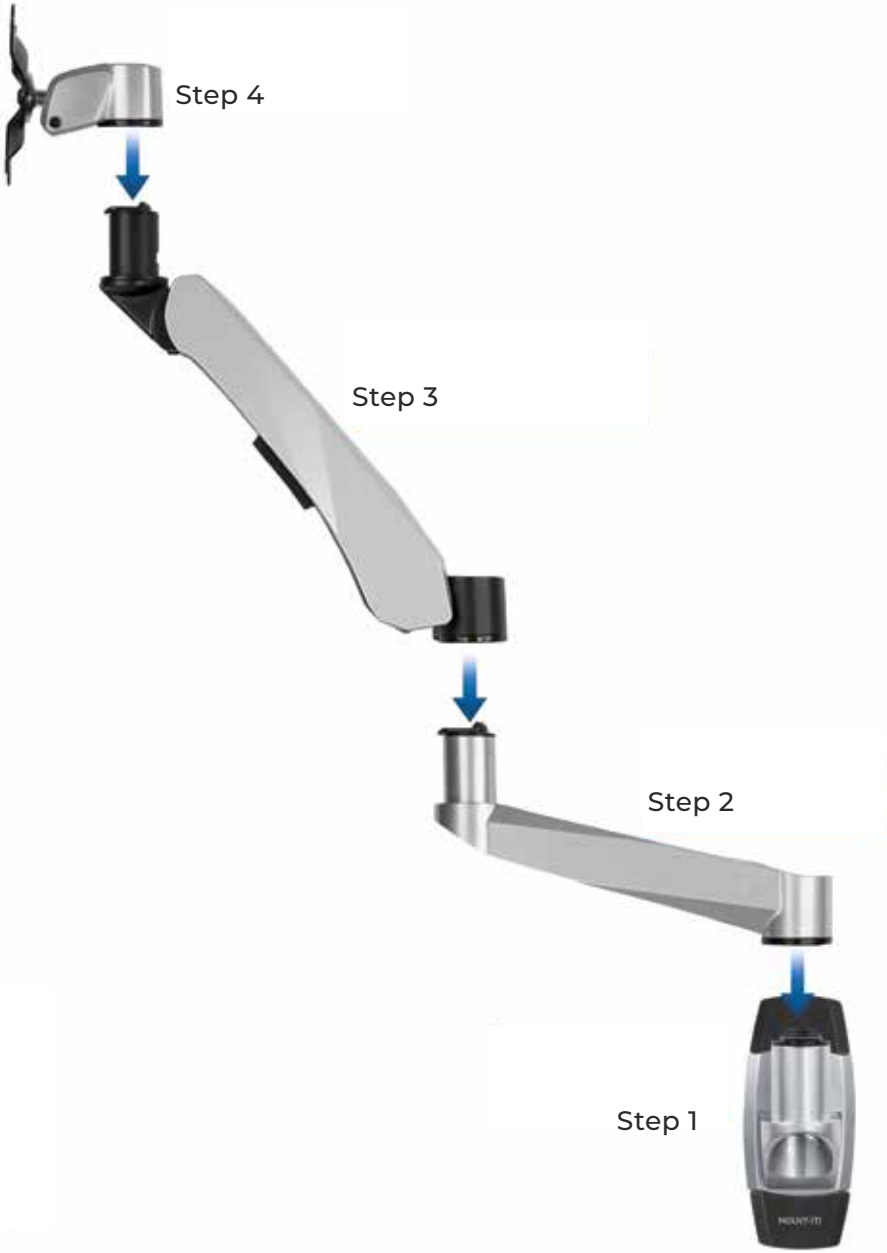

CLiX at a Glance

The CLiX Series brings together a full range of monitor mounting solutions—engineered for versatility, built for durability, and designed with streamlined assembly in mind. This at-a-glance summary highlights every model in the collection, making it easy to compare configurations at a glance making it easy to choose the right solution for any setup.

Cooling Fan

Clamp & Grommet Mounting

Tension Adjustment

Cable Management

WWW.MOUNT-IT.COM

TAA COMPLIANT
to meet government procurement standards

USA BASED SMALL BUSINESS SINCE 2006

© 2025 Mount-It! All rights reserved.
V-01 | June 2025