MOUNT-IT!

MI-386 / MI-386W

Motorized Fireplace TV Mount

Make the perfect use of the space above your fireplace with a motorized TV mount. Enjoy moving your TV up and down at the push of a button with the included remote control. Its high weight capacity makes this mount perfect for large screen TVs.

- Compatible with TVs between 40" and 70"
- Tilt and swivel features help to achieve the perfect viewing angle
- Fits VESA patterns from 200 x 100 to 600 x 400
- Available in black and white

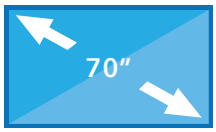

40" - 70"
SCREEN SIZE

200X100 to 600X400

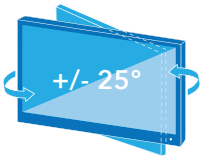

SWIVEL

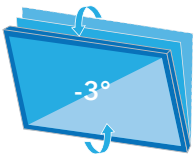

TILT

+/-3°
SCREEN LEVELING

Features Video

User Manual

MOUNT-IT.COM

Phone: 858.413.7670 • Fax: 858.762.3757 • Email: sales@mount-it.com

MI-386 / MI-386W

Motorized Fireplace TV Mount

MOUNT-IT!

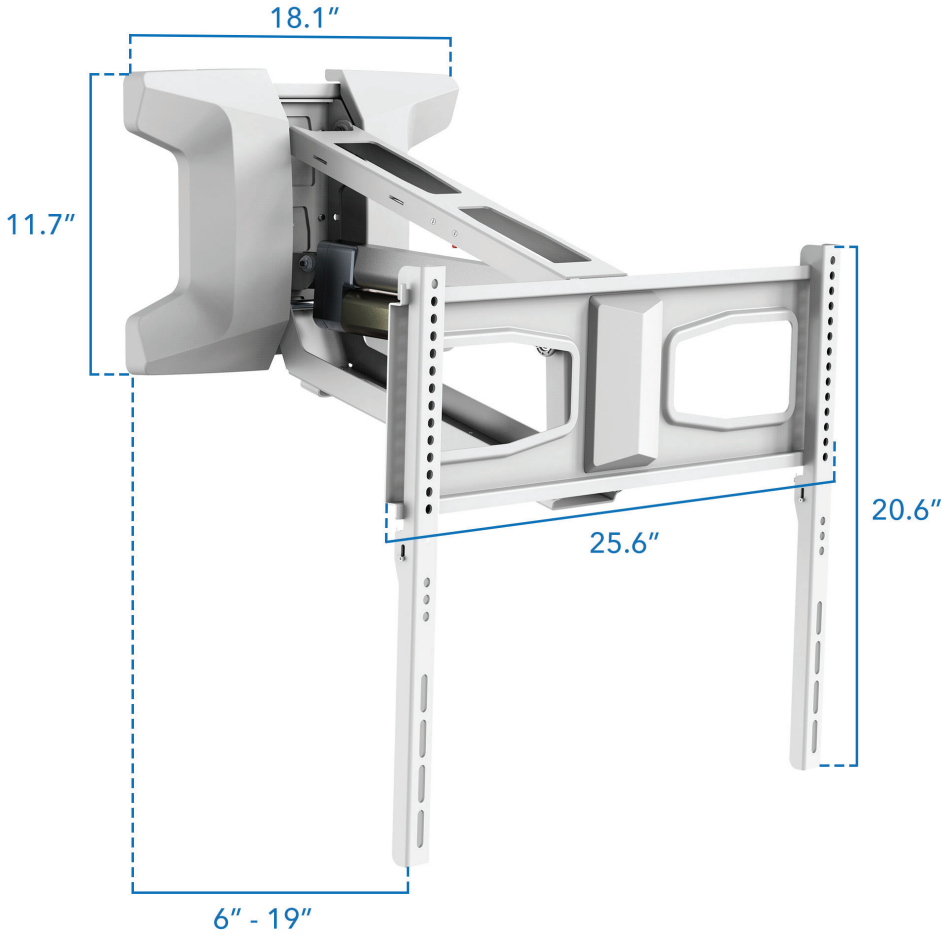

Remote controlled

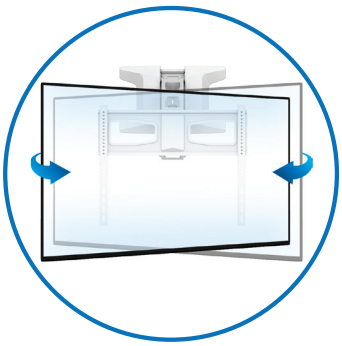

Swivels +/- 25°

Extends 6″ - 19.1″

Available in black and white

SPECIFICATIONS

TV Sizes:	40″ - 70″
Weight Capacity:	77 lbs
VESA Compatibility (mm):	200x100 / 200x200 / 300x200 300x300 / 400x200 / 400x300 400x400 / 600x400
Height Adjustment Range:	22.6″
Tilt:	-3°
Extension:	6″ - 19.1″
Swivel:	+/- 25°
Installation:	Mounts to standard 16″ studs
Color:	Black or white

MOUNT-IT.COM

Phone: 858.413.7670 • Fax: 858.762.3757 • Email: sales@mount-it.com

V-01 | AUG/2023

© 2023 Mount-It! All rights reserved.