MOUNT-IT!

Installation Manual

SKU: MI-12017

V1 10/25

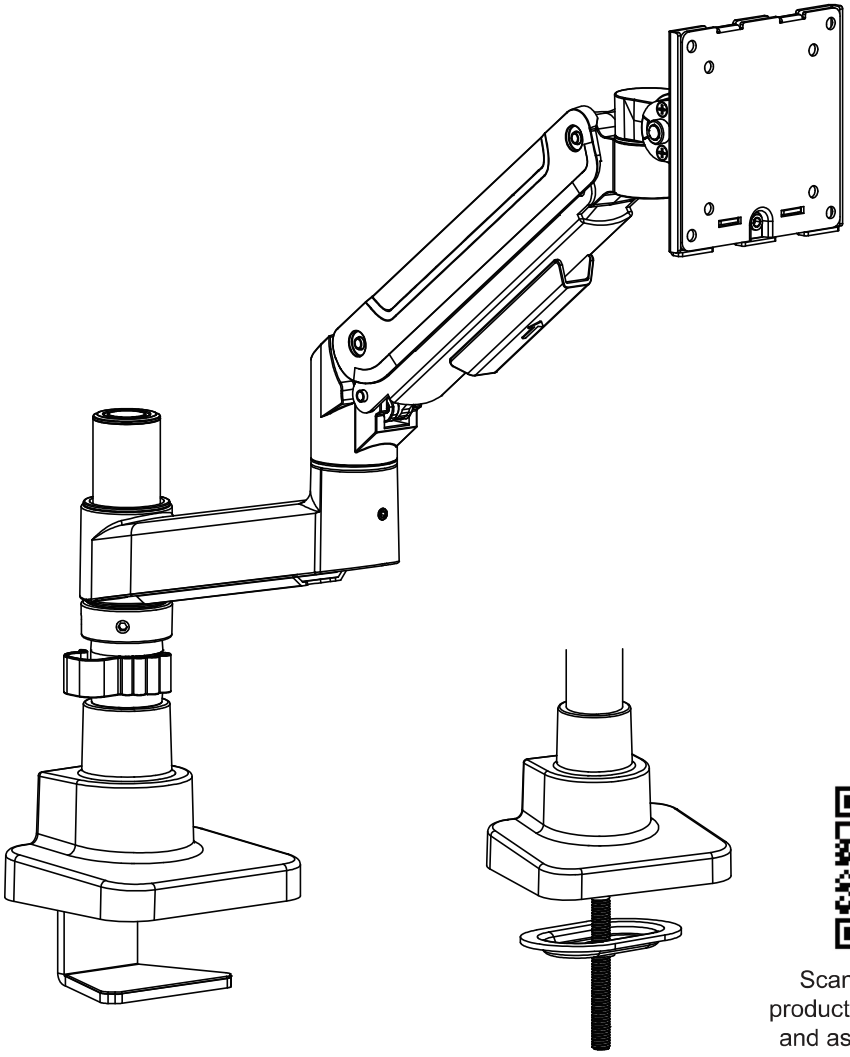

Scan this QR code for product information, videos, and assembly assistance.

HEAVY-DUTY MONITOR ARM

HAVE QUESTIONS?

Monday - Friday from 5:00am - 5:00pm PST

support@mount-it.com

(855) 925-5668

www.mount-it.com

Thank you for choosing Mount-It!

EN Read the entire instruction manual before you start installation and assembly. If you have any questions regarding any of the instructions or warnings, please contact Mount-It! for assistance.

CAUTION: Use with products heavier than the rated weights indicated may result in instability causing possible injury.
- Please closely follow the assembly instructions. Improper installation may result in damage or serious personal injury.
- Safety gear and proper tools must be used. This product should only be installed by professionals.
- This product is designed to be installed on solid concrete walls, masonry walls or wood stud walls.
- Make sure that the supporting surface will safely support the combined weight of the equipment and all attached hardware and components.
- Use the mounting screws provided and DO NOT OVER TIGHTEN mounting screws.
- This product contains small items that could be a choking hazard if swallowed. Keep these items away from children.
- This product is intended for indoor use only. Using this product outdoors could lead to product failure and personal injury.

IMPORTANT: Ensure that you have received all parts according to the component checklist prior to installation. If any parts are missing or faulty, contact Mount-It! for a replacement.

MAINTENANCE: Check that the product is secure and safe to use at regular intervals (at least every three months).

DE Lesen Sie die gesamte Bedienungsanleitung, bevor Sie mit der Installation und Montage beginnen. Wenn Sie Fragen zur Anleitung oder Warnungen haben, wenden Sie sich bitte an Ihren örtlichen Händler.

VORSICHT: Die Verwendung mit Produkten, die schwerer als die angegebenen Nenngewichte sind, kann zu Instabilität führen und zu möglichen Verletzungen führen.
- Bitte befolgen Sie die Montageanleitung genau. Eine unsachgemäße Installation kann zu Schäden oder schweren Verletzungen führen.
- Sicherheitsausrüstung und geeignete Werkzeuge müssen verwendet werden. Dieses Produkt sollte nur von Fachleuten installiert werden.
- Dieses Produkt ist auf massiven Betonwänden oder Mauerwerkswänden zu montieren.
- Stellen Sie sicher, dass die Auflagefläche das Gesamtgewicht des Geräts und aller angeschlossenen Hardware und Komponenten sicher trägt.
- Verwenden Sie die mitgelieferten Befestigungsschrauben und die Befestigungsschrauben NICHT ZU FEST ANZIEHEN.
- Dieses Produkt enthält Kleinteile, die beim Verschlucken eine Erstickungsgefahr darstellen können. Halten Sie diese Gegenstände von Kindern fern.
- Dieses Produkt ist nur für den Innenbereich bestimmt. Die Verwendung dieses Produkts im Freien kann zu Produktversagen und Verletzungen führen.

WICHTIG: Stellen Sie vor der Installation sicher, dass Sie alle Teile gemäß der Komponenten-Checkliste erhalten haben. Bei beschädigten oder fehlenden Teilen, wenden Sie sich an Ihre Verkaufsstelle, um Ersatz zu erhalten.

WARTUNG: Überprüfen Sie das Produkt in regelmäßigen Abständen auf Sicherheit und Stabilität (am besten alle drei Monate).

FR Lisez entièrement le guide d'utilisateur avant de commencer l'installation et le montage. Si vous avez des questions concernant les instructions ou les avertissements, veuillez contacter votre distributeur local pour une assistance.

ATTENTION: L'utilisation de produits plus lourds que les poids nominaux indiqués peut entraîner une instabilité causant des blessures potentielles.
- Les supports doivent être joints comme spécifié dans les instructions de montage. Une mauvaise installation peut entraîner des dommages ou de graves blessures aux personnes.
- Un équipement de sécurité et les outils appropriés doivent être utilisés. Ce produit devrait être installé uniquement par des professionnels.
- Ce produit est conçu pour être installé sur des murs avec poteaux en bois, des murs en béton massif ou murs en brique.
- Assurez-vous que la surface de soutien supporte en sécurité le poids combiné de l'équipement et de tous les matériaux et composantes associés.
- Utilisez les vis de montage fournies et NE SERREZ PAS TROP les vis de montage.
- Ce produit contient de petites pièces qui peuvent causer un étouffement si elles sont avalées. Eloignez ces pièces des enfants.
- Ce produit est prévu uniquement pour une utilisation à l'intérieur. L'utilisation de ce produit à l'extérieur peut entraîner une défaillance du produit ou des blessures aux personnes.

IMPORTANT: Avant l'installation, assurez-vous que vous avez reçu toutes les pièces selon la liste de vérification des composants. Si une pièce est manquante ou endommagée, téléphonez à votre distributeur local pour qu'il la remplace.

MAINTENANCE: À intervalles réguliers (au moins tous les trois mois) vérifiez que le support est d'utilisation sûre et fiable.

RU Перед началом установки и сборки прочитайте руководство по установке. Если у Вас возникли какие-либо вопросы относительно инструкций или предупреждений, свяжитесь с Вашим локальным распространителем для получения помощи.

Внимание: Использование продуктов, вес которых превышает указанный расчетный вес, может привести к неустойчивости и возможным травмам.
- Опоры должны быть установлены, как это показано в монтажных инструкциях. Неправильная установка может привести к получению серьезных травм.
- Необходимо использовать предохранительное устройство и специальные инструменты. Продукт должен устанавливаться только профессионалами.
- Продукт предназначен для установки на деревянные каркасные стены, твердые цементные стены или кирпичные стены.
- Убедитесь, что несущая поверхность выдержит вес всего установленного оборудования и комплектующих.
- Необходимо использовать монтажные винты, входящие в комплект поставки, и НЕ ПЕРЕТЯГИВАТЬ монтажные винты.
- Данный продукт содержит маленькие детали, которые представляют опасность удушения при проглатывании. Такие детали необходимо хранить в недоступном для детей месте.
- Данный продукт предназначен только для эксплуатации в помещениях. Использования данного продукта на улице может привести к поломке продукта и получению травм.

ВАЖНО: Перед установкой убедитесь, что Вы получили все детали в соответствии со списком комплектующих. Если не хватает каких-либо деталей или они поломаны, свяжитесь с Вашим местным распространителем по вопросу замены.

ТЕХНИЧЕСКОЕ ОБСЛУЖИВАНИЕ: Необходимо регулярно проверять (как минимум, раз в три месяца), чтобы кронштейн был зафиксирован, и его использование было безопасным.

ES Lea todo el manual de instrucciones antes de comenzar la instalación y ensamble de la unidad. Si tiene alguna inquietud con respecto a las instrucciones o advertencias, comuníquese con su distribuidor local.

PRECAUCIÓN: utilizar con productos de mayor peso al indicado en los límites de peso podría ocasionar inestabilidad y posibles heridas personales.
- Los soportes deben acoplarse tal como se indica en las instrucciones de ensamble. Una incorrecta instalación podría ocasionar daños y serias heridas personales.
- Utilice las herramientas y equipo de seguridad adecuados. Este producto solo debe ser instalado por profesionales.
- Este producto está diseñado para instalaciones en paredes de madera sólida, concreto sólido o bloques.
- Asegúrese de que la superficie de fijación sostenga de manera segura el peso total del equipo y todos sus componentes y hardware.
- Utilice los tornillos de ensamble suministrados y NO aplique demasiada tensión a los tornillos.
- Este producto contiene piezas pequeñas que representan un riesgo de asfixia. Mantenga estas piezas fuera del alcance de los niños.
- Este producto está diseñado para uso en interiores solamente. Utilizar este producto en exteriores podría ocasionar fallas y heridas personales.

IMPORTANTE: Asegúrese de que haya recibido todas las piezas según la lista de verificación de componentes para la instalación. Si falta alguna de las partes, o está dañada, comuníquese con su distribuidor.

MANTENIMIENTO: Compruebe periódicamente que el soporte esté asegurado y listo para usar (al menos cada tres meses).

PT Leia todo o manual de instruções antes de iniciar a instalação e montagem. Se você tiver alguma dúvida sobre quaisquer uma das instruções ou avisos, por favor, entre em contato com o seu distribuidor local para assistência.

ATENÇÃO: O uso com produtos mais pesados do que os pesos indicados pode resultar em instabilidade, causando possíveis danos.
- Os suportes devem ser anexados como especificado nas instruções de montagem. A instalação incorreta pode causar danos ou sérias lesões pessoais.
- Equipamentos de segurança e ferramentas adequadas devem ser utilizadas. Este produto só deve ser instalado por profissionais.
- Este produto é projetado para ser instalado em pilares verticais de paredes de madeira, paredes de concreto sólido ou de tijolos.
- Certifique-se que a superfície de suporte suportará com segurança o peso combinado do equipamento e todas as ferragens e componentes anexados.
- Use os parafusos de montagem fornecidos e NÃO APERTE EXCESSIVAMENTE os mesmos.
- Este produto contém pequenas peças que podem causar asfixia se ingeridas. Mantenha esses itens longe do alcance de crianças.
- Este produto destina-se somente para uso interno. Usá-lo em ambiente externo pode causar falhas no produto e lesões pessoais.

IMPORTANTE: Assegure-se que você recebeu todas as peças, de acordo com a lista de componentes, antes da instalação. Se alguma peça estiver faltando ou é defeituosa, contate o seu distribuidor local para substituição.

MANUTENÇÃO: Certifique-se que o suporte seja seguro e protegido para o uso em intervalos regulares (pelo menos a cada três meses).

VESA Compatible
75x75 100x100

FLAT/CURVED

FLAT SCREEN

CURVED SCREEN

Mount and Accessories

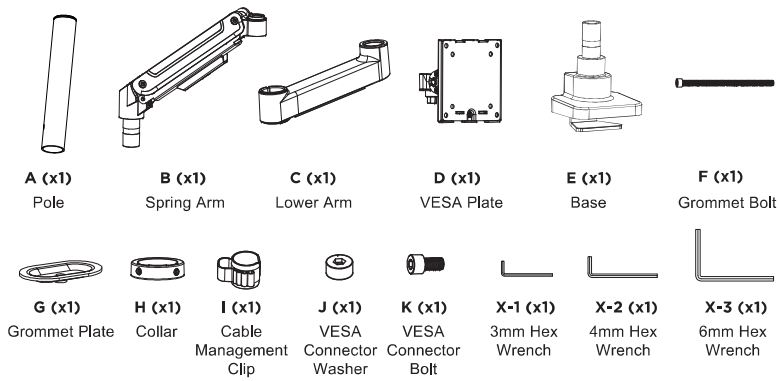

VESA Mounting Hardware

Check carefully to make sure there are no missing or defective parts. Some hardware provided may not be used. Use the correct mounting hardware suitable for your installation.

CHOKING HAZARD. Package includes small parts.
Not for children under 3 years. Adult supervision is required.

Missing Parts? Call us at (855) 925-5668 and we will ship replacement parts free of charge.

DIMENSIONS & WEIGHT CAPACITY

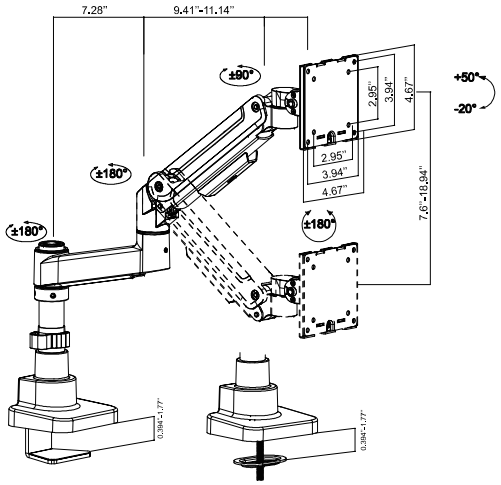

Rated weight capacity is 44lbs/20kgs per screen.
Caution:
Ensure all mounting surfaces are capable of holding the weight of your mount.
DO NOT EXCEED MAXIMUM LISTED WEIGHT CAPACITY. SERIOUS INJURY OR PROPERTY DAMAGE MAY OCCUR!

Step 1a

Clamp Mounting Option

- Insert the **6mm Hex Wrench (#X-3)** into the top of the **Base (#E)** and rotate it to open the clamp. Continue rotating until the clamp opening is wider than the thickness of your desk (10–45mm), as shown.
- Slide the clamp into place in the desired location on the desk. Tighten the clamp back down using the **6mm Hex Wrench (#X-3)** until it is secure.

Note: After assembling the mount, changing the location of the clamp will require removing the arms and pole. Ensure the mount is in the final location before continuing.

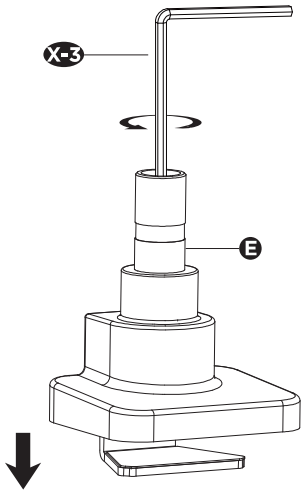

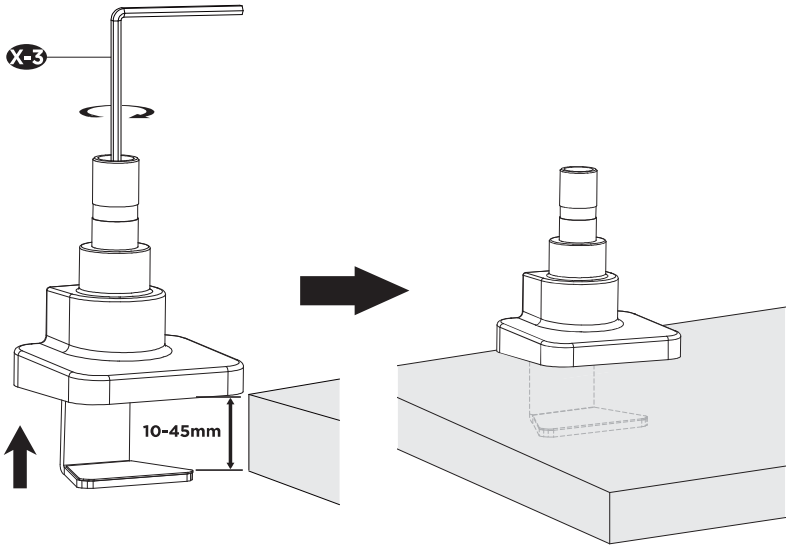

Step 1b

Grommet Mounting Option

For desks with a pre-drilled grommet hole (φ10–60mm)

- Loosen the clamp on the **Base (#E)** completely using the **6mm Hex Wrench (#X-3)** until you can remove both the **clamp plate (#E3)** and the **clamp bolt (#E2)**.
- Insert the **Grommet Bolt (#F)** into the top of the **Base (#E)** and position the base over the grommet hole on the desk.
- From beneath the desk, attach the **Grommet Plate (#G)** onto the end of the **Grommet Bolt (#F)** and use the **6mm Hex Wrench (#X-3)** to tighten the grommet bolt and secure the assembly.

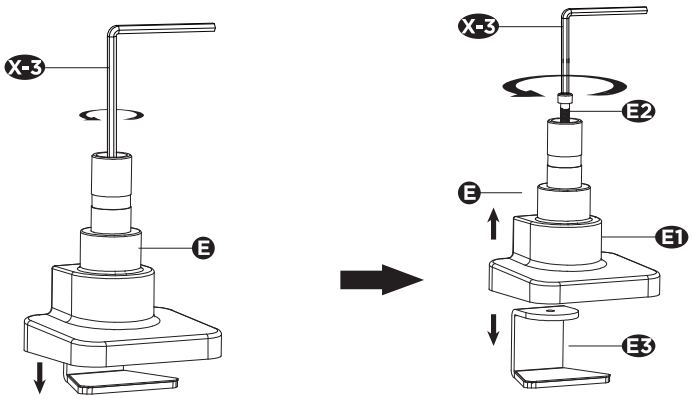

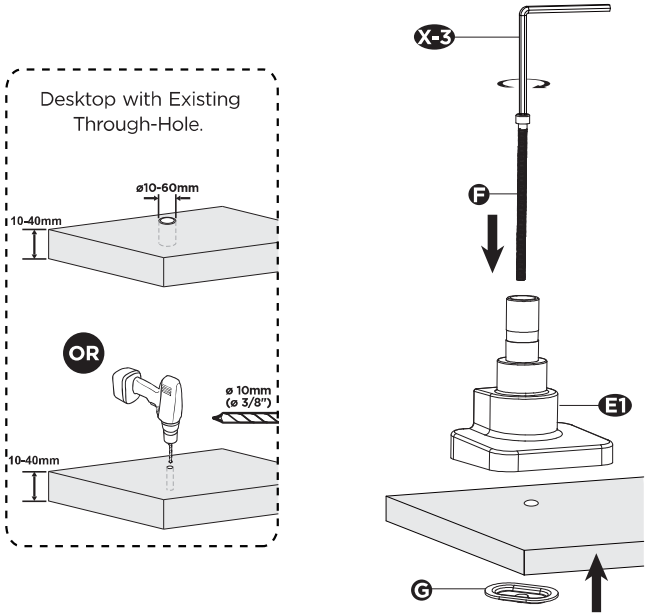

Step 2

Install the Pole and Lower Arm

- Place the **Pole (#A)** onto the top of the **Base (#E)**. Use the **3mm Hex Wrench (#X-1)** to tighten the set screw on the side of the pole to secure it. **Do not over-tighten.**
- Slide the **Cable Management Clip (#I)** onto the **Pole (#A)**, followed by the **Collar (#H)**. Adjust the collar to your desired height, then tighten its set screws using the **4mm Hex Wrench (#X-2).**
- Place the **Lower Arm (#C)** onto the **Pole (#A)** so that it rests securely on the **Collar (#H)**. The arm can rotate freely around the pole for positioning.

Note: Leave sufficient space between the arm and the top of the pole, so that the pole is fully through the arm.

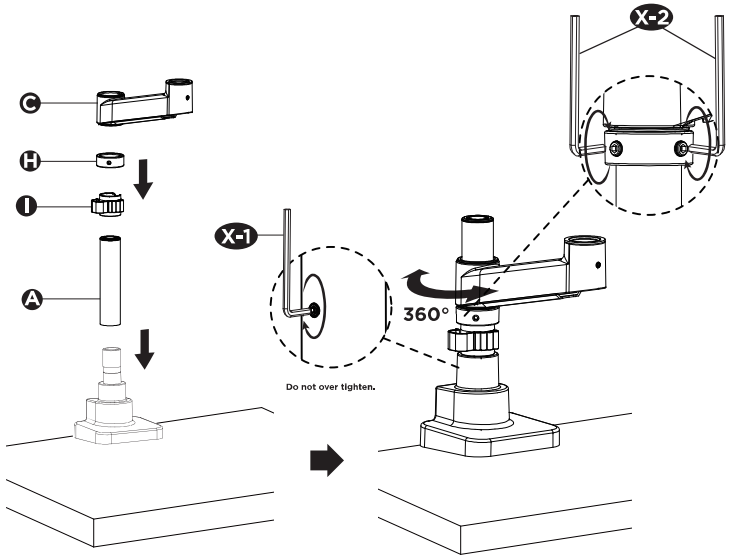

Step 3

Install the Spring Arm and VESA Plate

- Insert the **Spring Arm (#B)** into the open end of the **Lower Arm (#C).** Secure it by tightening the set screw on the side using the **3mm Hex Wrench (#X-1).**
- Attach the **VESA Plate (#D)** to the end of the **Spring Arm (#B)** using the **VESA Connector Washer (#J)** and **VESA Connector Bolt (#K)**. Tighten securely using the **6mm Hex Wrench (#X-3).**

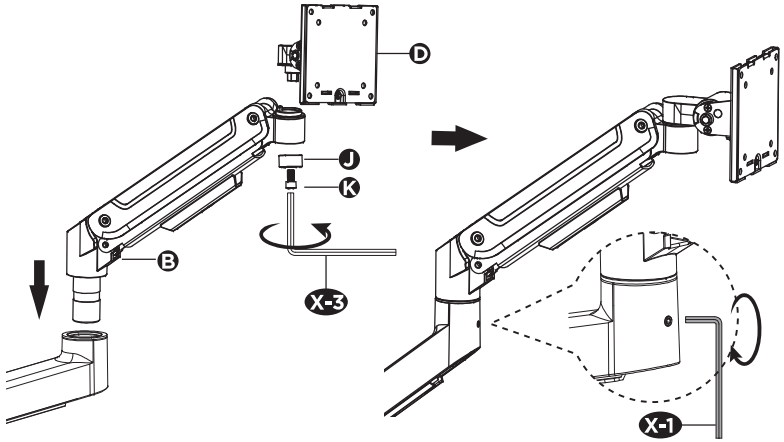

Step 4

Attach the VESA Plate to the Monitor

- Remove the thumb screw from the back of the VESA head, pull the bottom of the VESA plate away from the arm and then up to remove it.
- Select the appropriate size mounting bolt (#M-A, M-B) for your monitors mounting holes and verify the length of the VESA bolt is not too long. If you are unsure of the correct bolt size for your display refer to your monitor user manual or contact the monitor manufacturer for sizing information.
- Install the VESA plate onto the back of the monitor using the selected **Bolts (#M-A**, or **M-B**) and **Washers (#M-C)** and ensure that the arrow on the plate is pointing up to the top of the monitor.

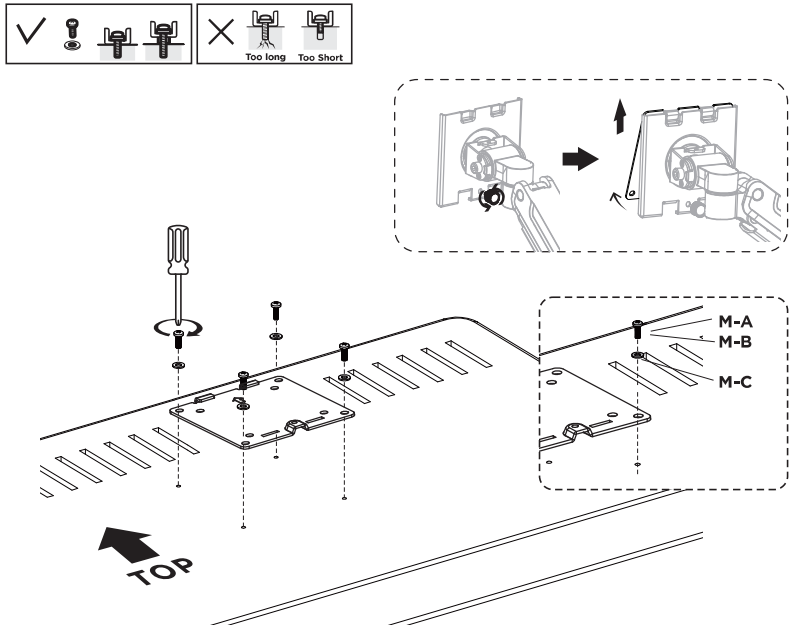

Step 5

Attach the Monitor to the Spring Arm

- Hang the monitor onto the end of the mount arm and reinstall the thumb screw to secure it to the arm.

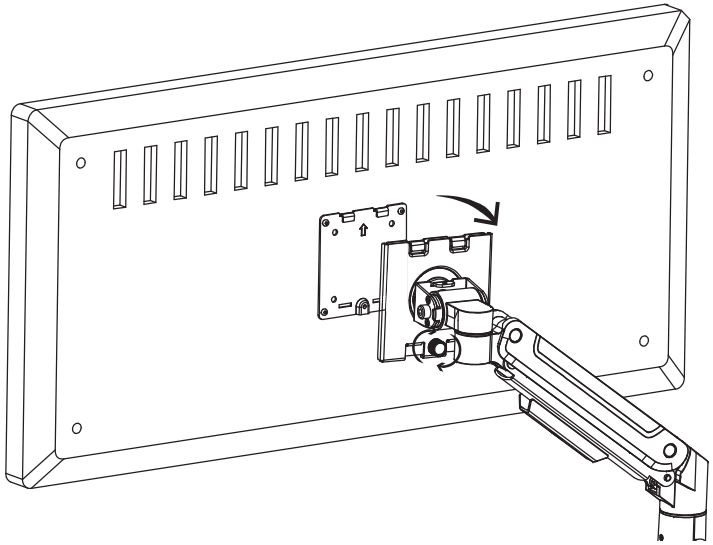

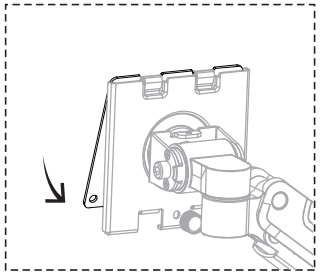

Step 6

Weight Balancing the Spring Arm

- Gas Spring tension may need to be adjusted to suit the weight of the monitors. To weight balance the spring arm begin by pushing the arm down to the lowered position, then use the **6mm Hex Wrench (#X-3)** to adjust the bolt turning counterclockwise toward the + (plus) sign for heavier monitors, increasing the tension and clockwise toward the **–** (minus) sign for lighter monitors, lowering the tension. Adjust until the arm does not raise back to the highest position or sink to the lowest position when released. This might require multiple rotations to reach the desired tension.

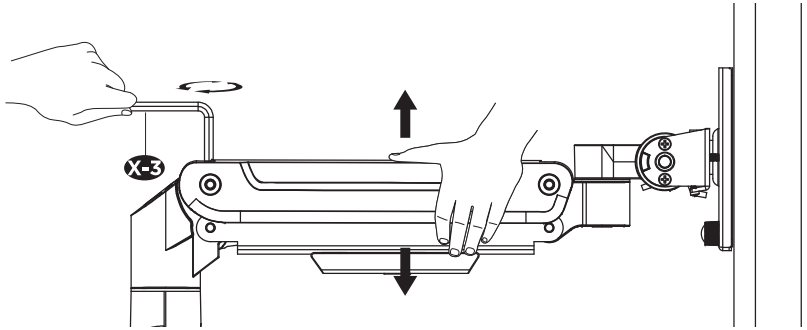

To properly balance the arm with monitors mounted, adjust the spring tension using the supplied Allen Key as follows:

First, position and firmly hold the arm horizontally as shown. Ask for assistance should you require it.

CAUTION: *To avoid damage to monitors or mount, always keep the arm in a horizontal position while making adjustments. Again, ask for assistance if required.*

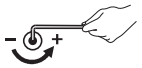

*If the arm **drops,** turn the adjustment screw counter-clockwise until it stays in a horizontal position.*

*If the arm **rises,** turn the adjustment screw clockwise until it stays in a horizontal position.*

CAUTION:
DO NOT *over tighten the screws.*

Step 7

Cable Management

- Remove the cable management covers by sliding them up parallel to the arms, then pulling them away. Route cables and reinstall the covers.

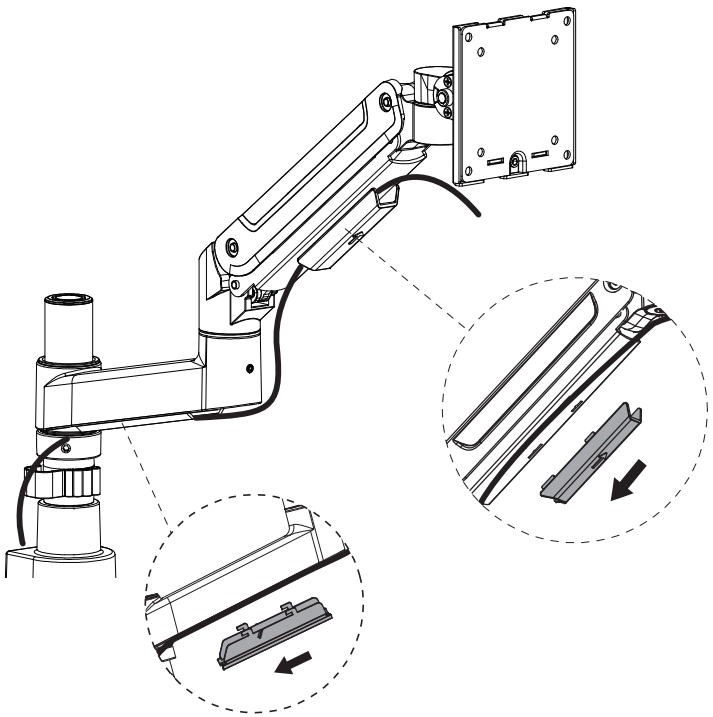

Step 8

Final Adjustments

- To adjust the tilt angle of your screen, tilt the screen to your desired viewing angle. If the screen does not stay in that position after adjustment, tighten the bolts on the side of the joint shown here using the **6mm Hex Wrench (#X-3).**
- The screen can be swiveled side to side for the optimal viewing angle, and may be rotated ±180°. Store the **Hex Wrenches** in the **Cable Management Clip (#I)** for future use.

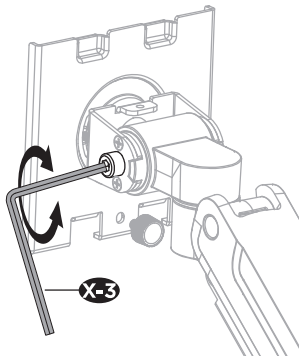

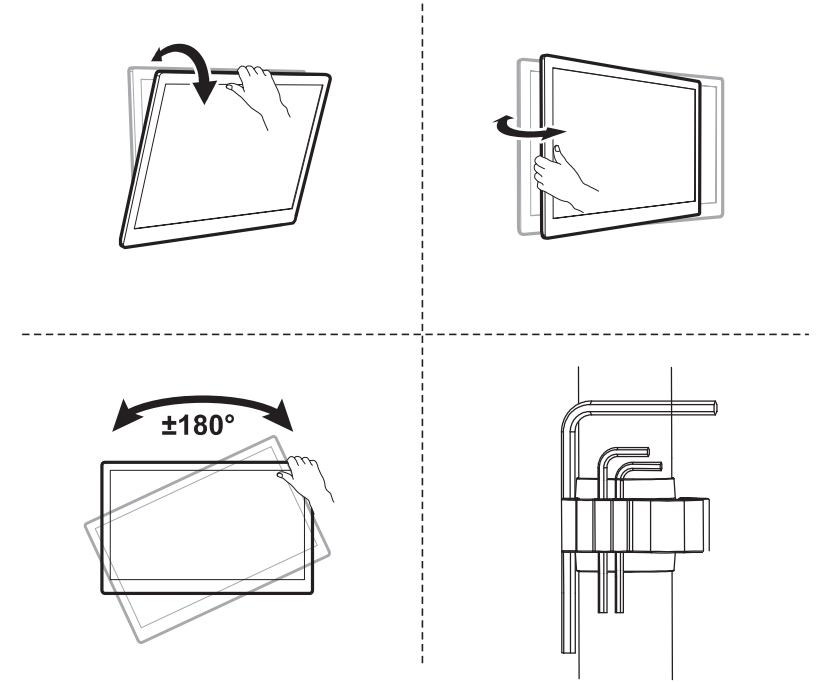

Visit us at **www.mount-it.com** for product registration and warranty information.

Our US based customer service team is standing by to answer any questions you have about your Mount-It! product.

Available by phone **Monday - Friday from 5:00am to 5:00pm** PST.

Chat live with an agent on our website!

support@mount-it.com

(855) 925-5668

www.mount-it.com