MOUNT-IT!

User Manual

SKU: MI-15005S
MI-15006S
MI-15007S
MI-15009S
V1 03/26

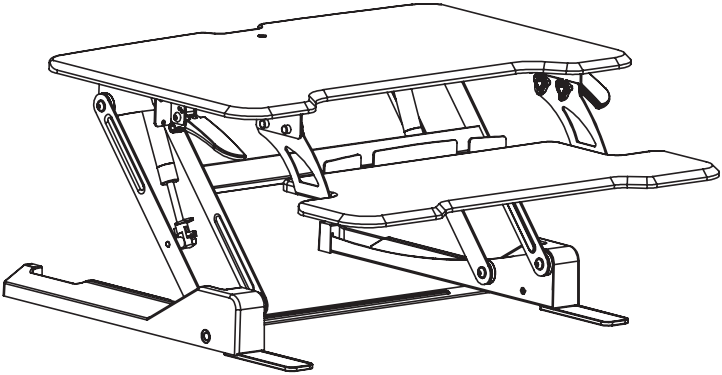

Please scan this QR code
to visit the product page

Compact Standing Desk Converter with 30" Desktop

HAVE QUESTIONS?

Monday - Friday from 5:00am - 5:00pm PST

support@mount-it.com (855) 925-5668 www.mount-it.com

Thank you for choosing Mount-It!

EN

Read the entire instruction manual before you start installation and assembly. If you have any questions regarding any of the instructions or warnings, please contact Mount-It! for assistance.

CAUTION: Use with products heavier than the rated weights indicated may result in instability causing possible injury.
• Please closely follow the assembly instructions. Improper installation may result in damage or serious personal injury.
• This product contains small items that could be a choking hazard if swallowed. Keep these items away from children.
IMPORTANT: Ensure that you have received all parts according to the component checklist prior to installation. If any parts are missing or faulty, contact Mount-It! for a replacement.
MAINTENANCE: Check that the product is secure and safe to use at regular intervals (at least every three months).

DE

Lesen Sie die gesamte Bedienungsanleitung, bevor Sie mit der Installation und Montage beginnen. Wenn Sie Fragen zur Anleitung oder Warnungen haben, wenden Sie sich bitte an Ihren örtlichen Händler.

VORSICHT: Die Verwendung mit Produkten, die schwerer als die angegebenen Nenngewichte sind, kann zu Instabilität führen und zu möglichen Verletzungen führen.
• Bitte befolgen Sie die Montageanleitung genau. Eine unsachgemäße Installation kann zu Schäden oder schweren Verletzungen führen.
• Dieses Produkt enthält Kleinteile, die beim Verschlucken eine Erstickungsgefahr darstellen können. Halten Sie diese Gegenstände von Kindern fern.
WICHTIG: Stellen Sie vor der Installation sicher, dass Sie alle Teile gemäß der Komponenten-Checkliste erhalten haben. Bei beschädigten oder fehlenden Teilen, wenden Sie sich an Ihre Verkaufsstelle, um Ersatz zu erhalten.
WARTUNG: Überprüfen Sie das Produkt in regelmäßigen Abständen auf Sicherheit und Stabilität (am besten alle drei Monate).

FR

Lisez entièrement le guide d'utilisateur avant de commencer l'installation et le montage. Si vous avez des questions concernant les instructions ou les avertissements, veuillez contacter votre distributeur local pour une assistance.

ATTENTION: L'utilisation de produits plus lourds que les poids nominaux indiqués peut entraîner une instabilité causant des blessures potentielles.
• Les supports doivent être joints comme spécifié dans les instructions de montage. Une mauvaise installation peut entraîner des dommages ou de graves blessures aux personnes.
• Ce produit contient de petites pièces qui peuvent causer un étouffement si elles sont avalées. Eloignez ces pièces des enfants.
IMPORTANT: Avant l'installation, assurez-vous que vous avez reçu toutes les pièces selon la liste de vérification des composants. Si une pièce est manquante ou endommagée, téléphonez à votre distributeur local pour qu'il la remplace.
MAINTENANCE: A intervalles réguliers (au moins tous les trois mois) vérifiez que le support est d'utilisation sûre et fiable.

RU

Перед началом установки и сборки прочитайте руководство по установке. Если у Вас возникли какие-либо вопросы относительно инструкций или предупреждений, свяжитесь с Вашим локальным распространителем для получения помощи.

Внимание: Использование продуктов, вес которых превышает указанный расчетный вес, может привести к неустойчивости и возможным травмам.
• Опоры должны быть установлены, как это показано в Монтажных инструкциях. Неправильная установка может привести к получению серьезных травм.
• Данный продукт содержит маленькие детали, которые представляют опасность удушения при проглатывании. Такие детали необходимо хранить в недоступном для детей месте.
ВАЖНО: Перед установкой убедитесь, что Вы получили все детали в соответствии со списком комплектующих. Если не хватает каких-либо деталей или они поломаны, свяжитесь с Вашим местным распространителем по вопросу замены.
ТЕХНИЧЕСКОЕ ОБСЛУЖИВАНИЕ: Необходимо регулярно проверять (как минимум, раз в три месяца), чтобы кронштейн был зафиксирован, и его использование было безопасным.

ES

Lea todo el manual de instrucciones antes de comenzar la instalación y ensamble de la unidad. Si tiene alguna inquietud con respecto a las instrucciones o advertencias, comuníquese con su distribuidor local.

PRECAUCION: utilizar con productos de mayor peso al indicado en los límites de peso podría ocasionar inestabilidad y posibles heridas personales.
• Los soportes deben acoplarse tal como se indica en las instrucciones de ensamble. Una incorrecta instalación podría ocasionar daños y serias heridas personales.
• Este producto contiene piezas pequeñas que representan un riesgo de asfixia. Mantenga estas piezas fuera del alcance de los niños.
IMPORTANTE: Asegúrese de que haya recibido todas las piezas según la lista de verificación de componentes para la instalación. Si falta alguna de las partes, o está dañada, comuníquese con su distribuidor.
MANTENIMIENTO: Compruebe periódicamente que el soporte esté asegurado y listo para usar (al menos cada tres meses).

PT

Leia todo o manual de instruções antes de iniciar a instalação e montagem. Se você tiver alguma dúvida sobre quaisquer uma das instruções ou avisos, por favor, entre em contato com o seu distribuidor local para assistência.

ATENÇÃO: O uso com produtos mais pesados do que os pesos indicados pode resultar em instabilidade, causando possíveis danos.
• Os suportes devem ser anexados como especificado nas instruções de montagem. A instalação incorreta pode causar danos ou sérias lesões pessoais.
• Este produto contém pequenas peças que podem causar asfixia se ingeridas. Mantenha esses itens longe do alcance de crianças.
IMPORTANTE: Assegure-se que você recebeu todas as peças, de acordo com a lista de componentes, antes da instalação. Se alguma peça estiver faltando ou é defeituosa, contate o seu distribuidor local para substituição.
MANUTENÇÃO: Certifique-se que o suporte seja seguro e protegido para o uso em intervalos regulares (pelo menos a cada três meses).

Desktop Weight: (0-33lbs)

Keyboard Weight: (≤5lbs)

CAUTION: DO NOT EXCEED MAXIMUM LISTED WEIGHT CAPACITY. SERIOUS INJURY OR PROPERTY DAMAGE MAY OCCUR!

PACKAGE CONTENTS

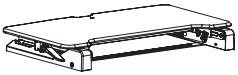

A (x1)
DESK CONVERTER

B (x1)
KEYBOARD TRAY

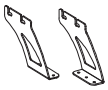

C (x1)
KEYBOARD TRAY BRACKETS

D (x2)
STABILIZER FEET

E (x10)
M5x10 BOLT

F (x1)
4mm HEX WRENCH

G (x1)
CABLE MANAGEMENT CLIP

H (x2)
CABLE TIES

DIMENSIONS & WEIGHT CAPACITY

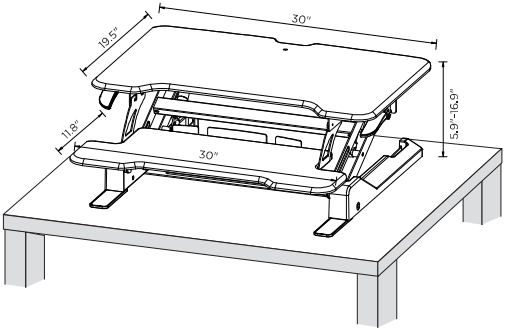

Total standing desk converter weight capacity is 33lbs* (desktop + keyboard tray.)
Keyboard tray weight capacity 5lbs max.
*Maximum weight capacity is 45lbs. 33lbs capacity is the maximum recommended load considered safe for raising and lowering the standing desk converter. The desk is capable of handling heavier monitors and computers if the user is capable of lifting and lowering the converter.
Assembled Weight 31.37lbs

⚠ WARNING

PINCH POINT

DO NOT place hands on or near support bars. Pinch points are created during lifting and lowering the worksurface. Failure to follow these instructions may result in serious personal injury.

Step 1

Remove the Desk Converter from the Box

Remove the Desk Converter (#A) from the packaging.

Note: Two person lift recommended.

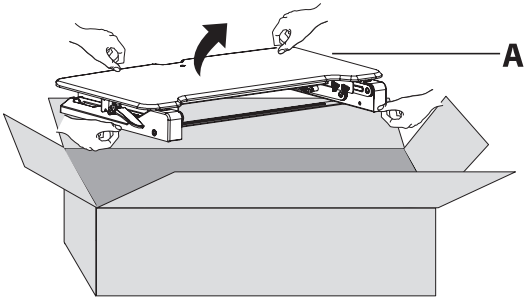

Step 2

Place the Desk Converter on a Level Surface

Place the desk converter on a level surface (such as a desk, table, or the floor.) Install the Extended Feet (#D) to the base of the desk converter using Hex Wrench (#F) and M5x10 Bolt (#E).

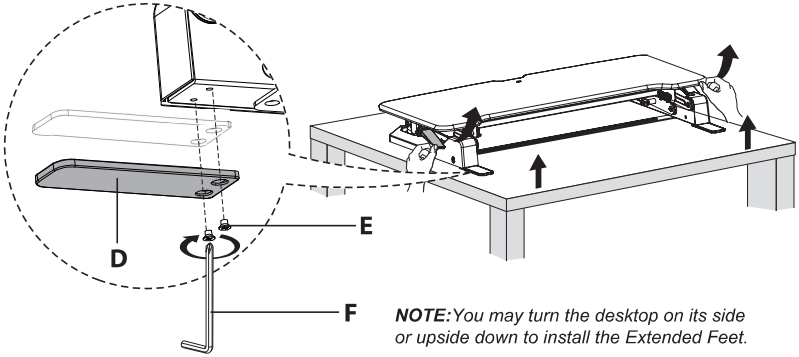

NOTE: *You may turn the desktop on its side or upside down to install the Extended Feet.*

Take care not to stand or lean directly above the product, and ensure your hands and fingers stay clear of the mechanism, as the product may be under pressure and might rise suddenly.

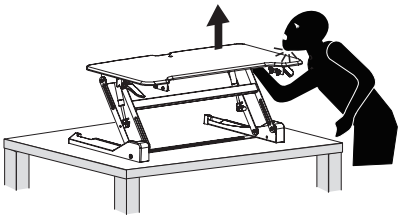

Step 3
Raise the Desk Converter

Squeeze the lever on the side of the Desk Converter and raise it to its highest position.

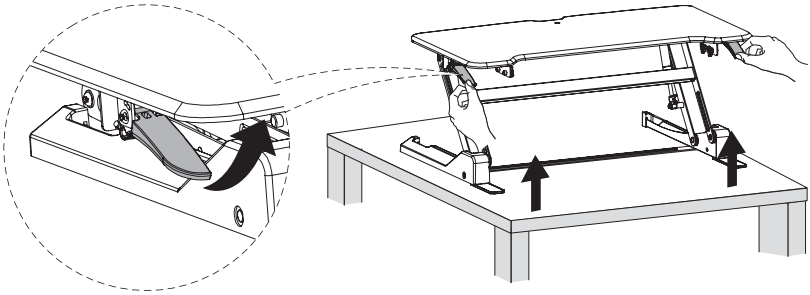

Step 4
Attach the Keyboard Brackets

Attach the Keyboard Tray Brackets (#C) to the bolt holes on the underside of the Keyboard Tray (#B) as shown, using the Bolts (#E).

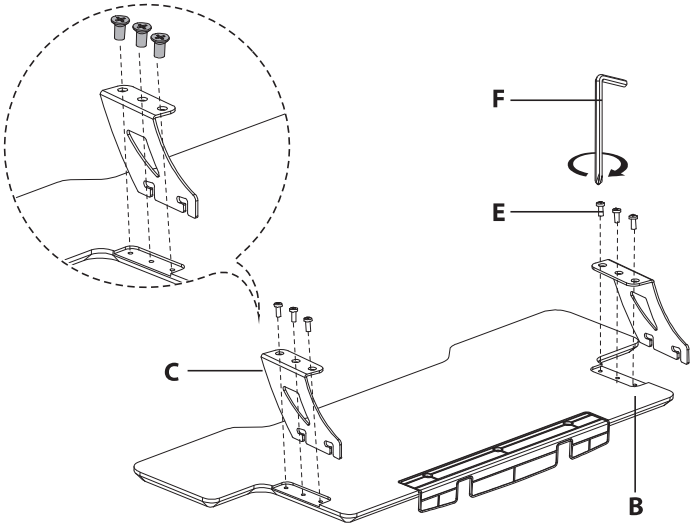

Step 5
Attach the Keyboard Tray

1.Attach the Keyboard Tray by sliding it beneath the bolts shown in magnification bubble 1. Ensure the bolts reach the end of the channels on the bracket, by lifting the tray up unto the bolts and pushing it forward.
2.Tighten the bolts until they are secure.

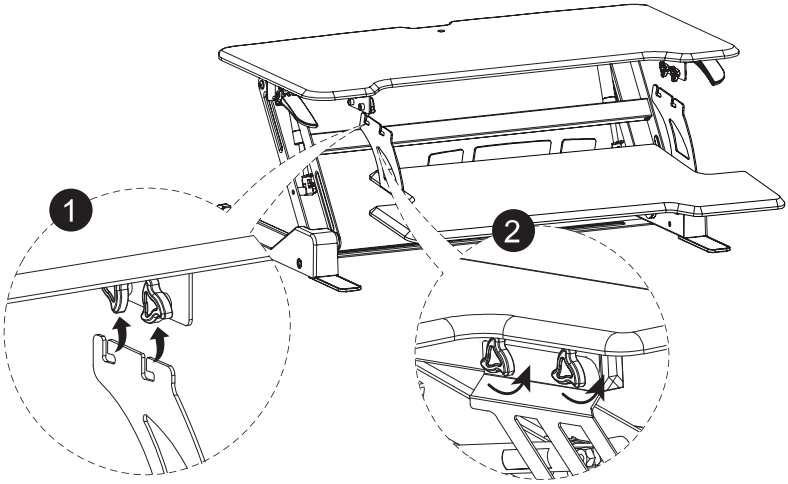

Step 6
Place Items on the Desk Converter

Place all monitors, laptops, or other equipment on the desk. Ensure none of the equipment is hanging off the edge or otherwise unstable/unbalanced. Refer to the warnings section at the end of the manual for further information on equipment placement.

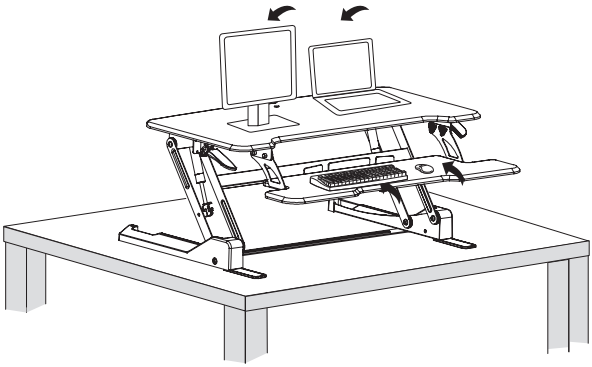

Step 7
Keyboard Tray Cable Management

(Optional Step) Route the cables according to your device placement to determine the best location for the Cable Management Clip. Remove the cover from the adhesive on the Cable Management Clip (#G) then attach it to the underside of the Desk Converter to manage the cables for the mouse, keyboard or other accessories.

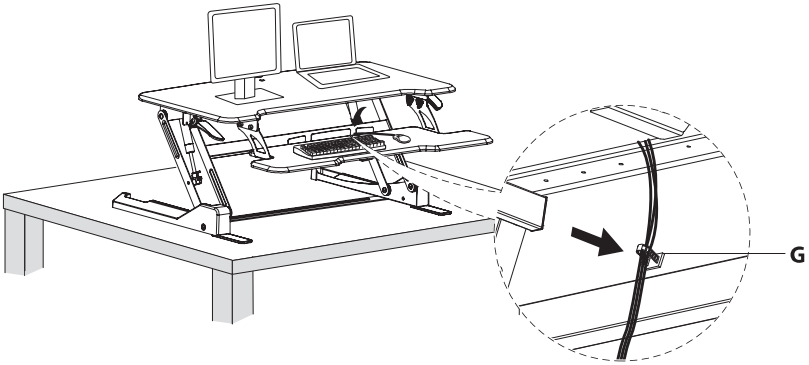

Step 8
Worksurface Cable Management

(Optional Step) Use the provided Cable Ties (#H) to collect cables for all peripheral devices on the worksurface. **Ensure that enough slack is left in the cables so that they do not pull any devices when raising or lowering the desk.**

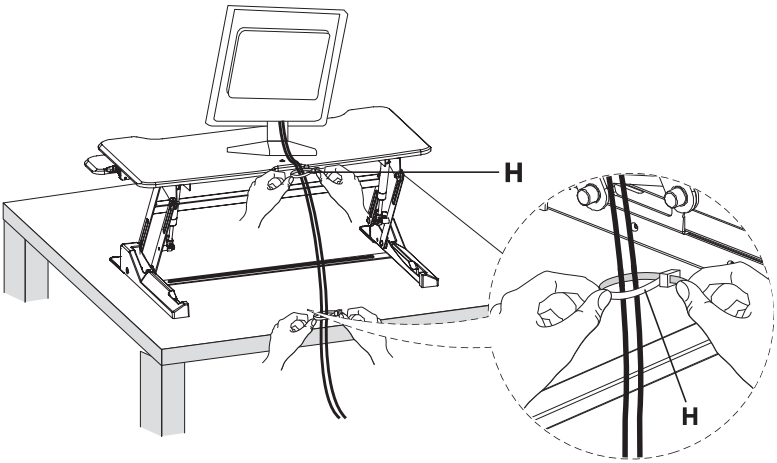

Warnings

Keep all monitors, laptops and other equipment fully on the work surface at all times. Allowing any part of these to hang off the edge may result in property damage and/or personal injury.

Raise the work surface slowly. Raising the work surface too quickly may cause monitors, laptops and other equipment to fall resulting in property damage and/or personal injury.

Ensure that enough slack is left in the cables so that they do not pull any devices when raising or lowering the desk and allow for the full range of vertical motion (16.3”). Failure to provide sufficient cable length may result in property damage or personal injury.

To avoid the potential to pinch cables in the mechanism it is important to follow the cable routing examples in this manual. Do not allow cables to pass through or rest upon the legs. Failure to follow these instructions may result in equipment damage or personal injury.

Visit us at **www.mount-it.com** for product registration and warranty information.

Our US based customer service team is standing by to answer any questions you have about your Mount-It! product.

Available by phone **Monday - Friday from 5:00am to 5:00pm** PST.

Chat live with an agent on our website!

support@mount-it.com

(855) 925-5668

www.mount-it.com