English

Installation Instruction

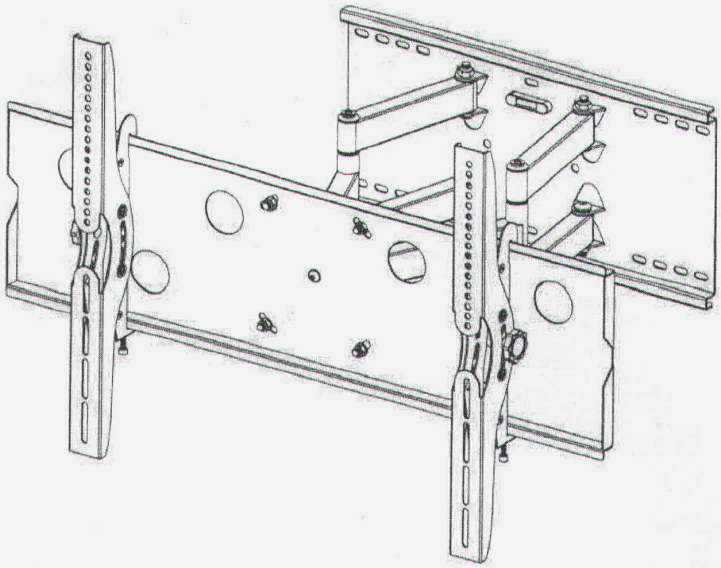

UNPACKING INSTRUCTIONS

- Carefully open the carton, remove contents and lay out on cardboard or other protective surface to avoid damage.
- Check package contents against the Supplied Parts List in the next page to assure that all components were received undamaged. Do not use damaged or defective parts.
- Carefully read all instructions before attempting installation.

IMPORTANT SAFETY INFORMATION

Install and operate this device with care. Please read this instruction before beginning the installation, and carefully follow all instructions contained herein. Use proper safety equipment during installation.

Please call a qualified installation contractor for help if you:

- If you don't understand these directions or have any doubts about the safety of the installation.
- If you are uncertain about the nature of your wall, consult a qualified installation contractor.

Do not use this product for any purpose or in any configuration not explicitly specified in this instruction. We hereby disclaim any and all liability for injury or damage arising from incorrect assembly, incorrect mounting, or incorrect use of this product.

	CAUTION!
WARNING	This TV mount must be securely attached to the vertical wall. If the mount is not properly installed it may fall, resulting in possible injury and/or damage.

Tools Required	■ 5/32" (4mm) Drill Bit ■ Phillips Screwdriver	■ 3/8" (10mm) Masonry Bit ■ Stud Finder	■ Wrench or Socket Set ■ Carpenter's Level

Note: The mounting components and hardware supplied in this package are not designed for installations to walls with steel studs or to cinder block walls. If the hardware you need for your installation is not included, please consult your local hardware store for proper mounting hardware for the application.

Supplied Parts List

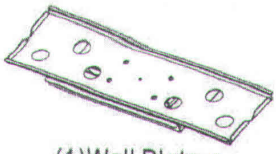
(1)Wall Plate-a

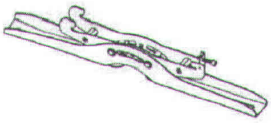
(1)Left Monitor Bracket-b

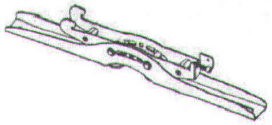
(1)Right Monitor Bracket-c

(1)Allen Key-d

(4)M4x12 Bolt-e

(4)M5x12 Bolt-f

(4)M6x12 Bolt-g

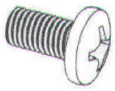
(4)M8x16 Bolt-h

(4)M4x30 Bolt-i

(4)M5x30 Bolt-j

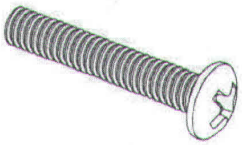
(4)M6x35 Bolt-k

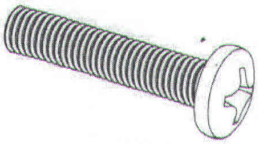
(4)M8x40 Bolt-l

(4)M4 Lock Washer-m

(4)M5 Lock Washer-n

(4)M6 Lock Washer-o

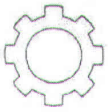
(4)M8 Lock Washer-p

(4)M4/M5 Space-q

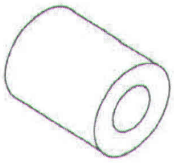
(4)M6/M8 Space-r

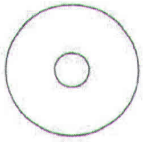
(8)M4/M5 Washer-s

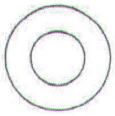
(4)M6/M8 Washer-t

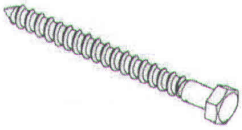
(6)M8x90 Lag Bolt-u

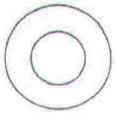
(6)Lag Bolt Washer-v

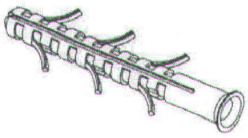
(6)M10x80 Concrete Anchor-w

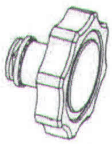
(2)Plastic Knob-x

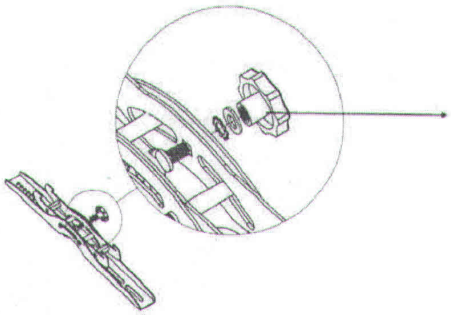

Pls install the Plastic Knob(x) on the Monitor Bracket(b,c) as left diagram before do the next step. Pls note the two knobs should be installed in the opposite way on the two monitor brackets.

Step 1A Mounting the Monitor Brackets to a TV with Flat Back

First of all, make sure the diameter of the Bolt(e,f,g,h) your TV requires. Once you have determined the correct diameter, please see the relative diagram as below. You will thread the Bolt into the TV using the correct Lock Washer(m,n,o,p) and Washer(s,t). Please make sure the Monitor Brackets(b,c) are vertically centered and level with each other.

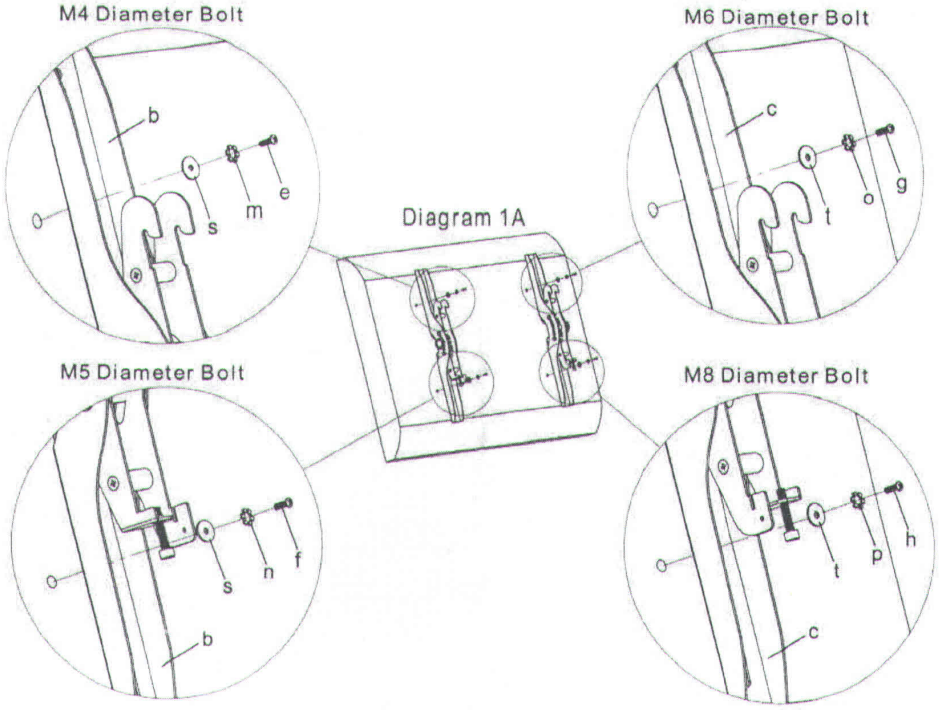

Step 1B Mounting the Monitor Brackets to a TV with Curved Back

First of all, make sure the diameter of the Bolt(i,j,k,l) your TV requires. Once you have determined the correct diameter, please see the relative diagram as below. You will thread the Bolt into the TV using the correct Lock Washer(m,n,o,p), Washer(s,t) and spacer(q,r). For the M4 or M5 diameter bolt, you will need another M4/M5 Washer between the Monitor Bracket and the Spacer. Please make sure the Monitor Brackets are vertically centered and level with each other.

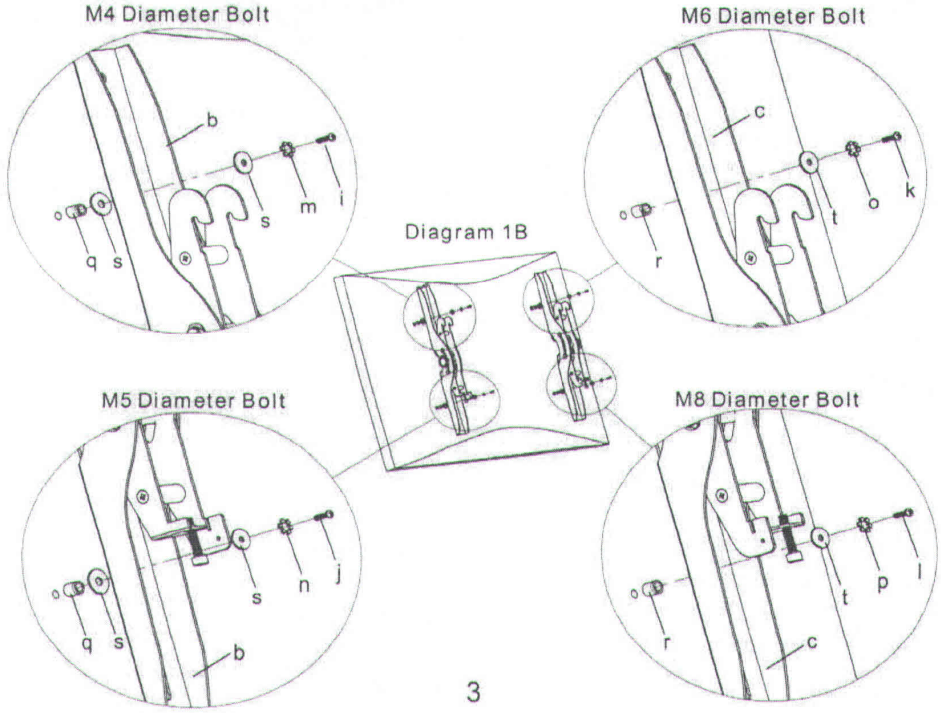

Step 2 Mounting the Wall Plate to the Wall

Brick, Solid Concrete mounting:
Use the Wall Plate(a) as a template to mark 6 hole locations on the wall. Three in the top row of slots and three more in the bottom row. Make sure these holes are level and there is at least 6"(150mm) distance between any two holes. Pre-Drill these holes with a 3/8"(10mm) masonry bit to at least 3"(75mm) in depth. Insert a Concrete Anchor(w) into each of these holes. Make sure the anchor is seated completely flush with the concrete surface even if there is a layer of drywall or other material in front. Attach the Wall Plate to the wall using 6pcs Lag Bolts(u) and 6pcs Lag Bolt Washers(v), shown in Diagram 2A.

Wood Stud mounting:
The Wall Plate(a) must be mounted to two wood studs at least 16" (406mm) apart. Use a stud finder to locate two adjacent studs. It is a good idea to verify where the studs are located with an awl or thin nail shown in Diagram 2B. Pre-drill a 3"(75mm) deep hole at the desired height in each stud using a 5/32"(4mm) drill bit. Make sure these holes are in the center area of the studs and level with each other. Use the Wall Plate as a template to mark the location of the second hole in each stud. Drill 3"(75mm) deep holes using the 5/32"(4mm) drill bit in the marked locations. Attach the Wall Plate to the wall using the 4pcs Lag Bolts(u) and 4pcs Lag Bolt Washers(v).

Diagram 2A

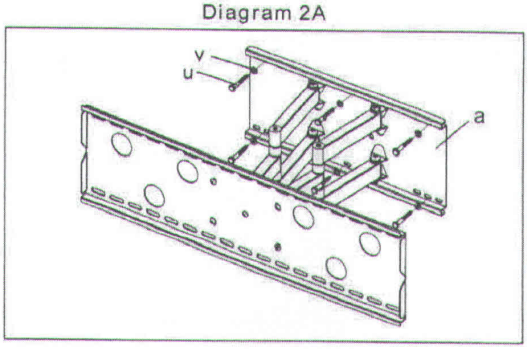

Diagram 2B

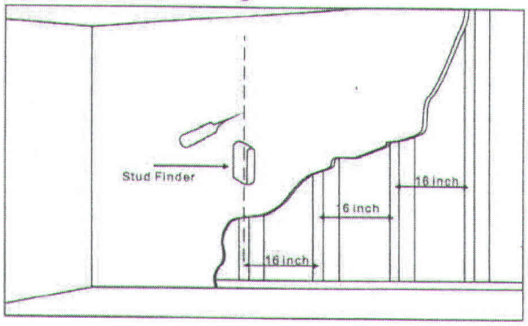

Step 3 Attaching Monitor to Wall Plate and Adding the Safety Bolts

Warning: Some TVs may require two people to lift! We are not responsible for personal injury or product damage.

First hook the Monitor Brackets(b,c) over the top of the wall Plate(a), then let the bottom of the Monitor Brackets rotate to the bottom of the Wall Plate as shown in the Diagram 3A. Use the Allen Key(d) to tighten the safety bolts. Then the Monitor Bracket will sit behind the bottom tab on the Wall Plate as shown in the Diagram 3B.

Diagram 3A

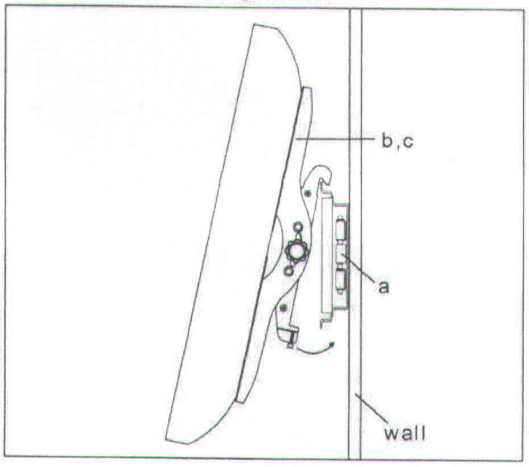

Diagram 3B

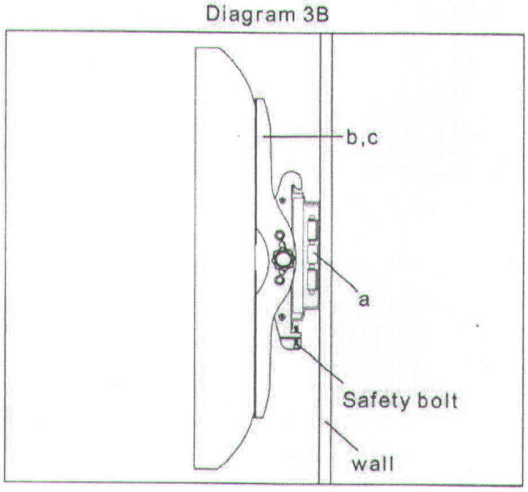

Step 4 Levelling Mount

You can re-level the mount after the mount has been installed on the wall. Leveling is achieved by rotating the front plate the TV sits on. Needn't to loose the 5 bolts on the front plate, just hold the TV and do the adjustment. See Diagram 4 below.

Diagram 4

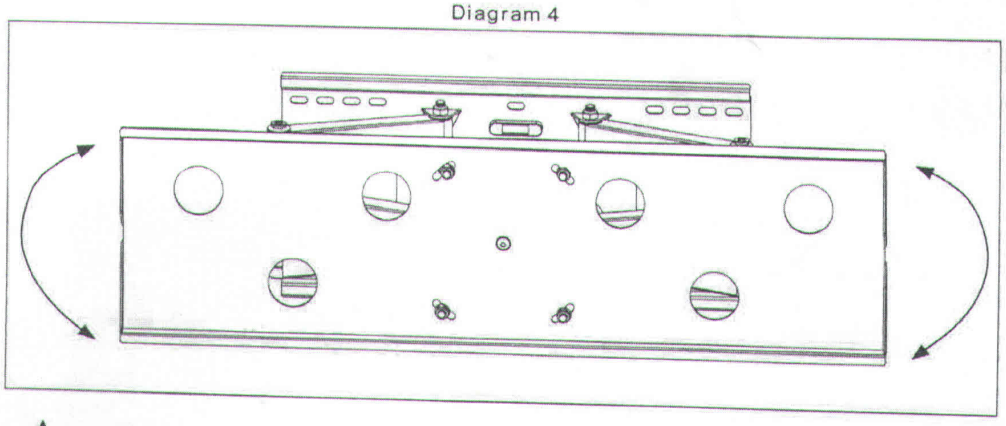

WARNING
Use two people to lift and position the TV onto the Wall Plate.

Thanks for choosing our products, enjoy the using.