MOUNT-IT!

Installation Manual

SKU: MI-7986

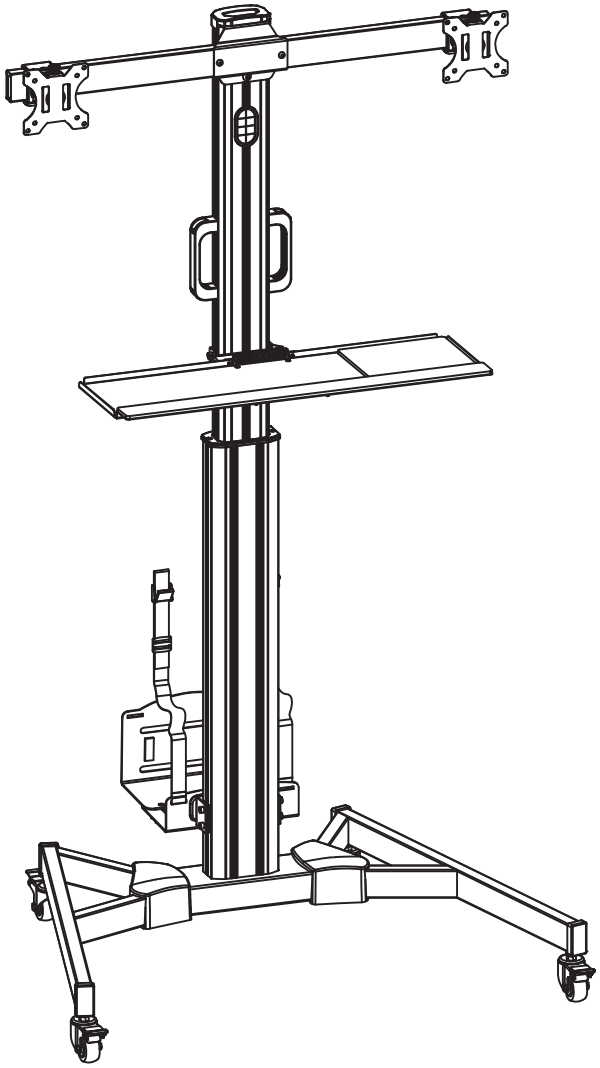

Please scan this QR code
to visit the product page.

HEIGHT ADJUSTABLE DUAL MONITOR COMPUTER CART

HAVE QUESTIONS?

Monday - Friday from 8:00am - 4:00pm PST

support@mount-it.com

(855) 925-5668

www.mount-it.com

Thank you for choosing Mount-It!

EN Read the entire instruction manual before you start installation and assembly. If you have any questions regarding any of the instructions or warnings, please contact Mount-It! for assistance.

CAUTION: Use with products heavier than the rated weights indicated may result in instability causing possible injury.
- Please closely follow the assembly instructions. Improper installation may result in damage or serious personal injury.
- Safety gear and proper tools must be used. This product should only be installed by professionals.
- This product is designed to be installed on solid concrete walls, masonry walls or wood stud walls.
- Make sure that the supporting surface will safely support the combined weight of the equipment and all attached hardware and components.
- Use the mounting screws provided and DO NOT OVER TIGHTEN mounting screws.
- This product contains small items that could be a choking hazard if swallowed. Keep these items away from children.
- This product is intended for indoor use only. Using this product outdoors could lead to product failure and personal injury.

IMPORTANT: Ensure that you have received all parts according to the component checklist prior to installation. If any parts are missing or faulty, contact Mount-It! for a replacement.

MAINTENANCE: Check that the product is secure and safe to use at regular intervals (at least every three months).

DE Lesen Sie die gesamte Bedienungsanleitung, bevor Sie mit der Installation und Montage beginnen. Wenn Sie Fragen zur Anleitung oder Warnungen haben, wenden Sie sich bitte an Ihren örtlichen Händler.

VORSICHT: Die Verwendung mit Produkten, die schwerer als die angegebenen Nenngewichte sind, kann zu Instabilität führen und zu möglichen Verletzungen führen.
- Bitte befolgen Sie die Montageanleitung genau. Eine unsachgemäße Installation kann zu Schäden oder schweren Verletzungen führen.
- Sicherheitsausrüstung und geeignete Werkzeuge müssen verwendet werden. Dieses Produkt sollte nur von Fachleuten installiert werden.
- Dieses Produkt ist auf massiven Betonwänden oder Mauerwerkswänden zu montieren.
- Stellen Sie sicher, dass die Auflagefläche das Gesamtgewicht des Geräts und aller angeschlossenen Hardware und Komponenten sicher trägt.
- Verwenden Sie die mitgelieferten Befestigungsschrauben und die Befestigungsschrauben NICHT ZU FEST ANZIEHEN.
- Dieses Produkt enthält Kleinteile, die beim Verschlucken eine Erstickungsgefahr darstellen können. Halten Sie diese Gegenstände von Kindern fern.
- Dieses Produkt ist nur für den Innenbereich bestimmt. Die Verwendung dieses Produkts im Freien kann zu Produktversagen und Verletzungen führen.

WICHTIG: Stellen Sie vor der Installation sicher, dass Sie alle Teile gemäß der Komponenten-Checkliste erhalten haben. Bei beschädigten oder fehlenden Teilen, wenden Sie sich an Ihre Verkaufsstelle, um Ersatz zu erhalten.

WARTUNG: Überprüfen Sie das Produkt in regelmäßigen Abständen auf Sicherheit und Stabilität (am besten alle drei Monate).

FR Lisez entièrement le guide d'utilisateur avant de commencer l'installation et le montage. SI vous avez des questions concernant les instructions ou les avertissements, veuillez contacter votre distributeur local pour une assistance.

ATTENTION: L'utilisation de produits plus lourds que les poids nominaux indiqués peut entraîner une instabilité causant des blessures potentielles.
- Les supports doivent être joints comme spécifié dans les instructions de montage. Une mauvaise installation peut entraîner des dommages ou de graves blessures aux personnes.
- Un équipement de sécurité et les outils appropriés doivent être utilisés. Ce produit devrait être installé uniquement par des professionnels.
- Ce produit est conçu pour être installé sur des murs avec poteaux en bois, des murs en béton massif ou murs en brique.
- Assurez-vous que la surface de soutien supporte en sécurité le poids combiné de l'équipement et de tous les matériaux et composantes associés.
- Utilisez les vis de montage fournies et NE SERREZ PAS TROP les vis de montage.
- Ce produit contient de petites pièces qui peuvent causer un étouffement si elles sont avalées. Eloignez ces pièces des enfants.
- Ce produit est prévu uniquement pour une utilisation à l'intérieur. L'utilisation de ce produit à l'extérieur peut entraîner une défaillance du produit ou des blessures aux personnes.

IMPORTANT: Avant l'installation, assurez-vous que vous avez reçu toutes les pièces selon la liste de vérification des composants. Si une pièce est manquante ou endommagée, téléphonez à votre distributeur local pour qu'il la remplace.

MAINTENANCE: À intervalles réguliers (au moins tous les trois mois) vérifiez que le support est d'utilisation sûre et fiable.

RU Перед началом установки и сборки прочитайте руководство по установке. Если у Вас возникли какие-либо вопросы относительно инструкций или предупреждений, свяжитесь с Вашим локальным распространителем для получения помощи.

Внимание: Использование продуктов, вес которых превышает указанный расчетный вес, может привести к неустойчивости и возможным травмам.
- Опоры должны быть установлены, как это показано в монтажных инструкциях. Неправильная установка может привести к получению серьезных травм.
- Необходимо использовать предохранительное устройство и специальные инструменты. Продукт должен устанавливаться только профессионалами.
- Продукт предназначен для установки на деревянные каркасные стены, твердые цементные стены или кирпичные стены.
- Убедитесь, что несущая поверхность выдержит вес всего установленного оборудования и комплектующих.
- Необходимо использовать монтажные винты, входящие в комплект поставки, и НЕ ПЕРЕТЯГИВАТЬ монтажные винты.
- Данный продукт содержит маленькие детали, которые представляют опасность удушения при проглатывании. Такие детали необходимо хранить в недоступном для детей месте.
- Данный продукт предназначен только для эксплуатации в помещениях. Использования данного продукта на улице может привести к поломке продукта и получению травм.

ВАЖНО: Перед установкой убедитесь, что Вы получили все детали в соответствии со списком комплектующих. Если не хватает каких-либо деталей или они поломаны, свяжитесь с Вашим местным распространителем по вопросу замены.

ТЕХНИЧЕСКОЕ ОБСЛУЖИВАНИЕ: Необходимо регулярно проверять (как минимум, раз в три месяца), чтобы кронштейн был зафиксирован, и его использование было безопасным.

ES Lea todo el manual de instrucciones antes de comenzar la instalación y ensamble de la unidad. Si tiene alguna inquietud con respecto a las instrucciones o advertencias, comuníquese con su distribuidor local.

PRECAUCIÓN: utilizar con productos de mayor peso al indicado en los límites de peso podría ocasionar inestabilidad y posibles heridas personales.
- Los soportes deben acoplarse tal como se indica en las instrucciones de ensamble. Una incorrecta instalación podría ocasionar daños y serias heridas personales.
- Utilice las herramientas y equipo de seguridad adecuados. Este producto solo debe ser instalado por profesionales.
- Este producto está diseñado para instalaciones en paredes de madera sólida, concreto sólido o bloques.
- Asegúrese de que la superficie de fijación sostenga de manera segura el peso total del equipo y todos sus componentes y hardware.
- Utilice los tornillos de ensamble suministrados y NO aplique demasiada tensión a los tornillos.
- Este producto contiene piezas pequeñas que representan un riesgo de asfixia. Mantenga estas piezas fuera del alcance de los niños.
- Este producto está diseñado para uso en interiores solamente. Utilizar este producto en exteriores podría ocasionar fallas y heridas personales.

IMPORTANTE: Asegúrese de que haya recibido todas las piezas según la lista de verificación de componentes para la instalación. Si falta alguna de las partes, o está dañada, comuníquese con su distribuidor.

MANTENIMIENTO: Compruebe periódicamente que el soporte esté asegurado y listo para usar (al menos cada tres meses).

PT Leia todo o manual de instruções antes de iniciar a instalação e montagem. Se você tiver alguma dúvida sobre quaisquer uma das instruções ou avisos, por favor, entre em contato com o seu distribuidor local para assistência.

ATENÇÃO: O uso com produtos mais pesados do que os pesos indicados pode resultar em instabilidade, causando possíveis danos.
- Os suportes devem ser anexados como especificado nas instruções de montagem. A instalação incorreta pode causar danos ou sérias lesões pessoais.
- Equipamentos de segurança e ferramentas adequadas devem ser utilizadas. Este produto só deve ser instalado por profissionais.
- Este produto é projetado para ser instalado em pilares verticais de paredes de madeira, paredes de concreto sólido ou de tijolos.
- Certifique-se que a superfície de suporte suportará com segurança o peso combinado do equipamento e todas as ferragens e componentes anexados.
- Use os parafusos de montagem fornecidos e NÃO APERTE EXCESSIVAMENTE os mesmos.
- Este produto contém pequenas peças que podem causar asfixia se ingeridas. Mantenha esses itens longe do alcance de crianças.
- Este produto destina-se somente para uso interno. Usá-lo em ambiente externo pode causar falhas no produto e lesões pessoais.

IMPORTANTE: Assegure-se que você recebeu todas as peças, de acordo com a lista de componentes, antes da instalação. Se alguma peça estiver faltando ou é defeituosa, contate o seu distribuidor local para substituição.

MANUTENÇÃO: Certifique-se que o suporte seja seguro e protegido para o uso em intervalos regulares (pelo menos a cada três meses).

COMPATIBLE VESA SIZES

75x75 100x100

COMPATIBLE WITH TVs UP TO

32" MAX FLAT/CURVED

8kgx2 (17.6lbs)x2 RATED MOUNT

2kg (4.4lbs) RATED KEYBOARD TRAY

5kg (11lbs) RATED CPU

Mount and Accessories

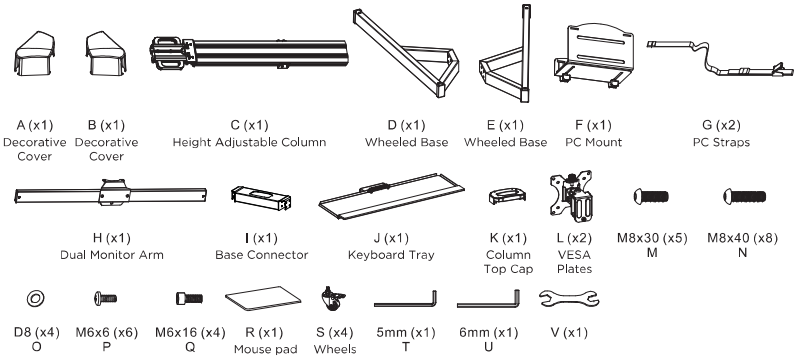

Monitor Mounting Hardware x2

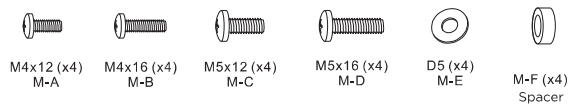

Check carefully to make sure there are no missing or defective parts. Some hardware provided may not be used. Use the correct mounting hardware suitable for your installation.

CHOKING HAZARD. Package includes small parts.
Not for children under 3 years. Adult supervision is required.

Missing Parts? Call us at (855) 925-5668 and we will ship replacement parts free of charge.

DIMENSIONS & WEIGHT CAPACITY

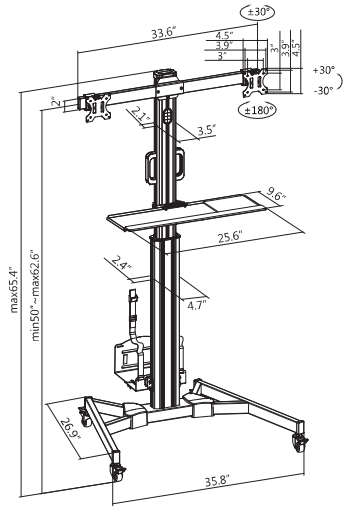

Rated weight capacity is 17.6lbs for each mount, 4.4lbs for the keyboard tray, and 11lbs for the CPU.

Caution:
Ensure all mounting surfaces are capable of holding the weight of your mount + keyboard tray + CPU. DO NOT EXCEED MAXIMUM LISTED WEIGHT CAPACITY. SERIOUS INJURY OR PROPERTY DAMAGE MAY OCCUR!

Step 1

Assembling the Base

• Turn Base Connector (#I) upside down and place both halves of the Wheeled Base (#D, #E) into the slots as shown, aligning them with the bolt holes. Secure in place using Bolts (#N) and tighten until secure using 5mm Hex Wrench (#T).

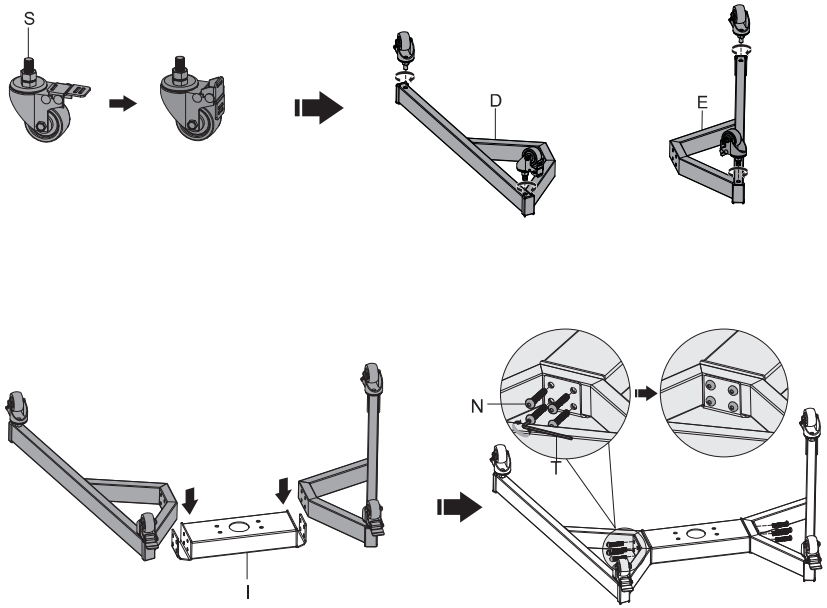

Step 2

Attach the Decorative Covers

• Turn the base over and attach the Decorative Covers (#A, #B) to cover the joints between the Wheeled Base halves and the Base Connector.

• Level the base as needed, and tighten the bolts between the wheel and the base by using Wrench (#V)

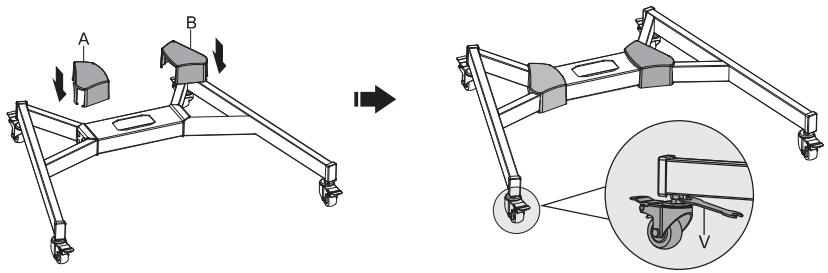

Step 3

Connect the Column to the Base

• Insert the Height Adjustable Column (#C) into the base and secure from beneath using Washers (#O) and Bolts (#M). Tighten until secure using 5mm Hex Wrench (#T).

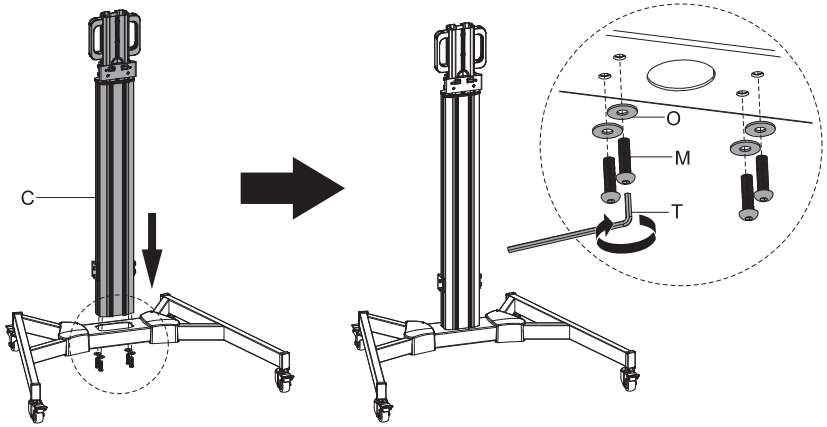

Step 4

Adjust the Height of the Column

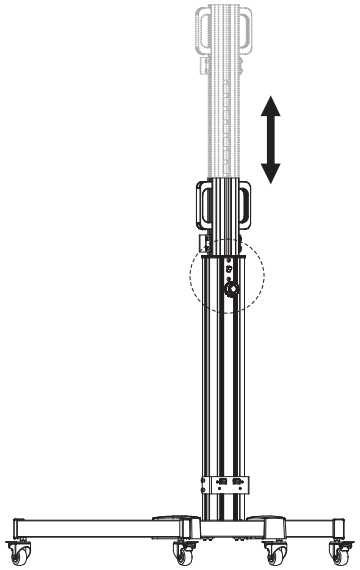

UP

• To raise the height of the column, turn the height adjustment knob on the back of the column counterclockwise towards the arrow that says “unlock” then raise the column to the desired height and turn the knob clockwise towards the arrow that says “lock”.

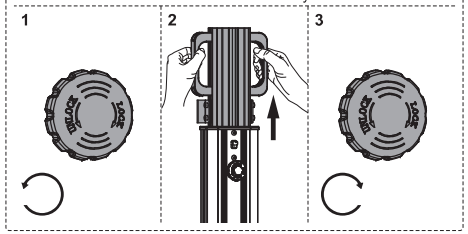

DOWN

• To lower the height of the column, turn the height adjustment knob on the back of the column counterclockwise towards the arrow that says “unlock”. Next pull the handle upward slightly and press the pawl to release the latch to lower the column. Lower the column to the desired height and release the pawl. Turn the knob clockwise towards the arrow that says “lock”.

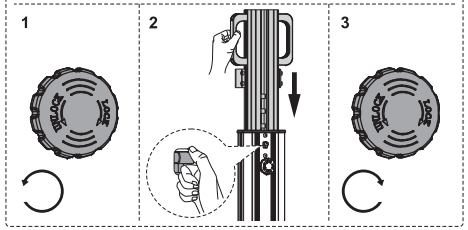

Step 5

Adjusting the Handle and Keyboard Tray Connector

• Using the 5mm Hex Wrench (#T) to loosen the bolts shown here, adjust the height of the handle and the keyboard tray bracket to the desired height.

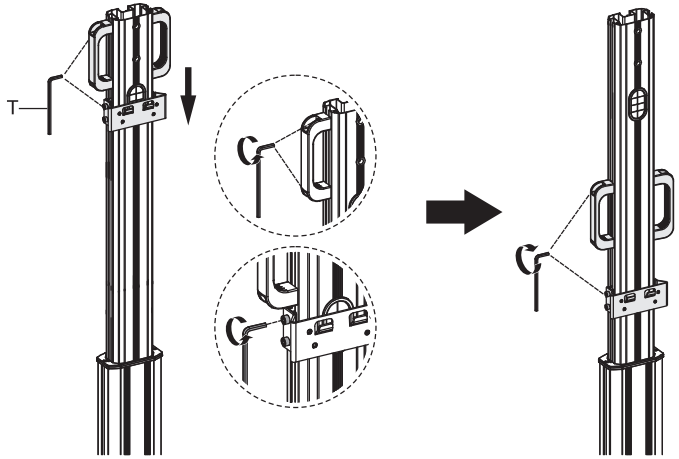

Step 6

Attaching the Keyboard Tray

• To install the Keyboard Tray (#J), hook the back of the tray onto the two hookson the keyboard tray connector (shown in the magnification bubble.) Secure it in place using Bolts (#P). Place the Mouse Pad (#R) on the tray.

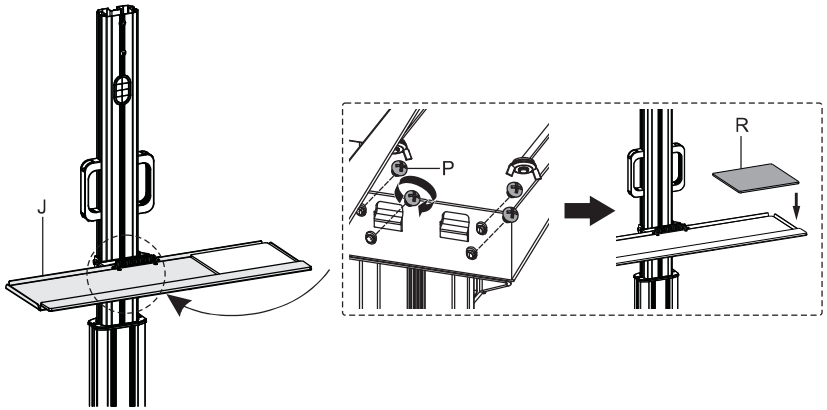

Step 7

Attaching the Dual Monitor Arm

• Attach the Dual Monitor Arm (#H) to the top of the column as shown, using the 2 Bolts (#Q) on the top two holes, and 1 Bolt (#M) on the front lower hole.

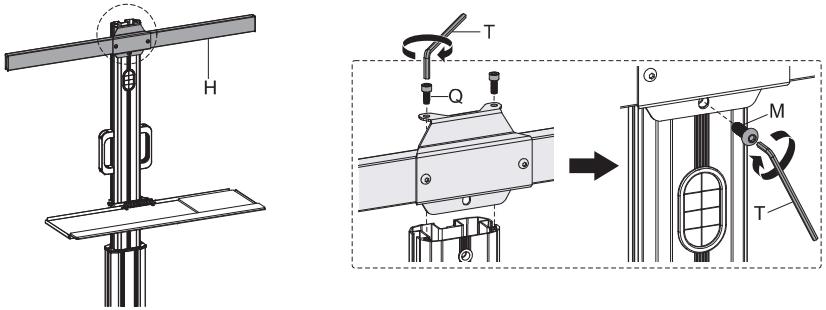

Step 8

Removing the VESA Plate

• Remove the thumb screw on the top of the VESA plate, then slide the plate up and off the bracket.

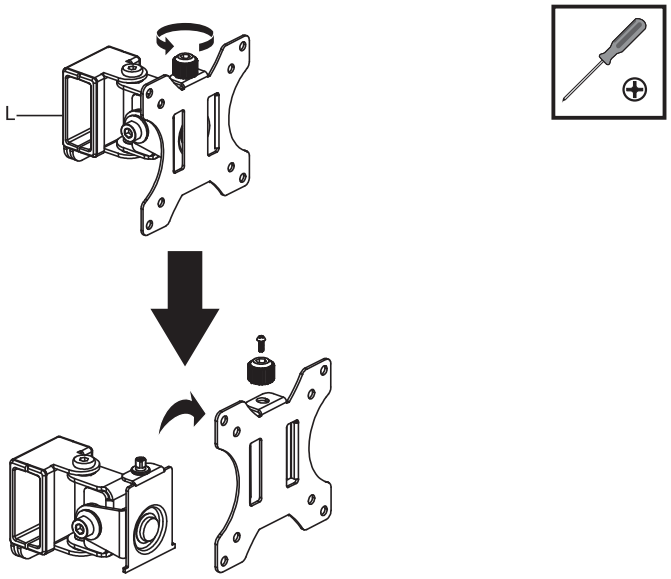

Step 9

Attach the Monitor to the VESA Plate

• Select the appropriate size mounting bolt (Select one size #M-A, M-B, M-C or M-D) and washer (#M-E) for your display's mounting holes and verify the length of the VESA bolt is not too long. If you are unsure of the correct bolt size for your display refer to your display's user manual or contact the display's manufacturer for sizing information.
• If necessary, use the included spacers (#M-F) between the mount and the screen as shown above to adjust the length of the mounting bolt. Multiple spacers can be used in combination to achieve the desired bolt depth. Attach the VESA Plate using the selected bolts and tighten until secure. Do not over tighten.

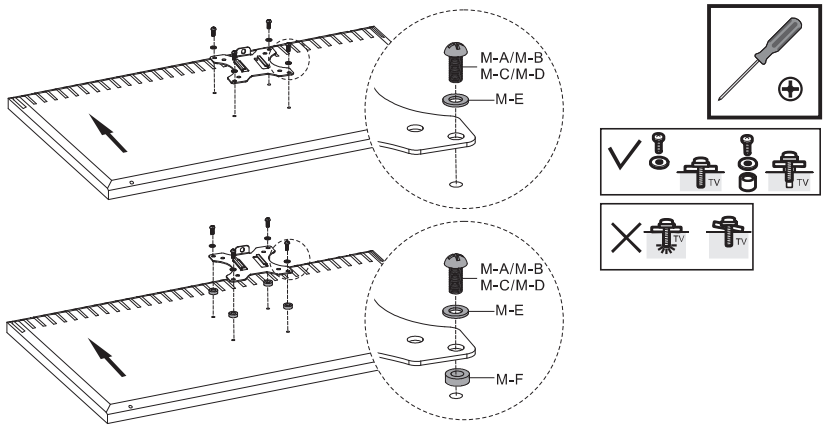

Step 10

Installing the VESA Mounts and Top Cap

• Slide one each of the VESA Plates (#L) onto opposite ends of the Dual Monitor Arm as shown so that the front of the bracket faces toward the keyboard tray. Once in the desired position tighten the bolt on the rear of the bracket to fix it in place. Install bolt (#Q) to the end of each arm to prevent the monitors from accidentally being removed from the arm. Place the Column Top Cap (#K) on the top of the column.

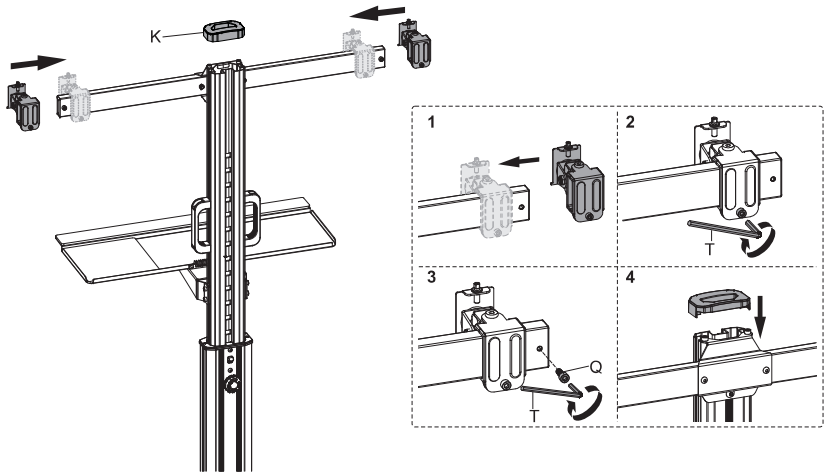

Step 11

Reattach the VESA Plates and Monitors

• Slide the VESA plates back onto the brackets and reinstall the bolt on the top of each VESA plate.

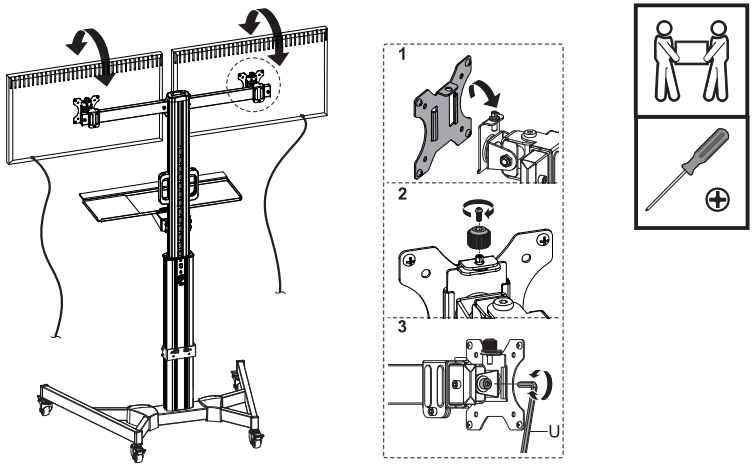

Step 12

Position the PC Mount Connector

• If needed, lower or raise the PC Mount Connector by loosening the bolts shown here. For the recommended positioning the bottom of the connector should be approximately 3-5" from the base of the column.

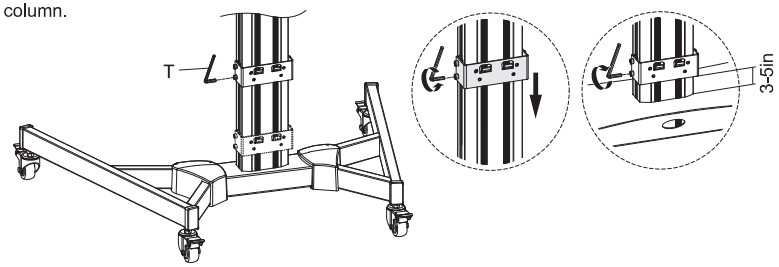

Step 13

Preparing the PC Mount

• Open the PC Mount (#F) to its widest setting by partially loosening the hand knobs on the underside of the mount and sliding the two halves away from each other.

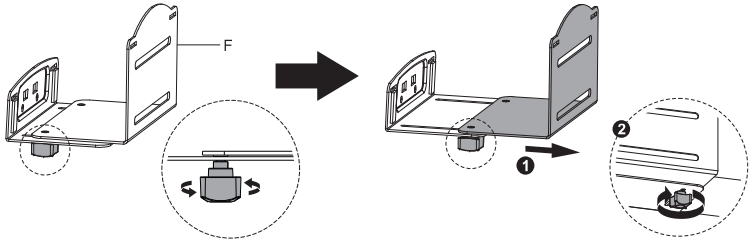

Step 14
Attaching the PC Mount

• To attach the PC Mount (#F) hook the back of the tray onto the two hooks on the PC Mount Connector (shown in the magnification bubble.) Secure it in place using Bolts (#P).

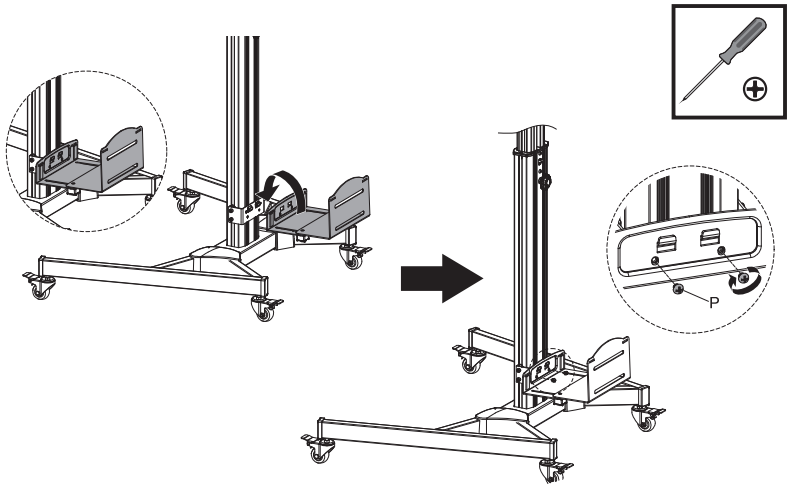

Step 15
Inserting the PC Straps

• Insert the T-shaped ends of the two PC Straps (#G) through the horizontal slots on the upper left and right of the PC Mount (see the image below for reference.) For easier adjustments ensure that the latch side of the straps face away from the PC Mount. The straps should be inserted through the slots so that when they are pulled back the T-shaped end of the strap prevents it from coming back through the slot.

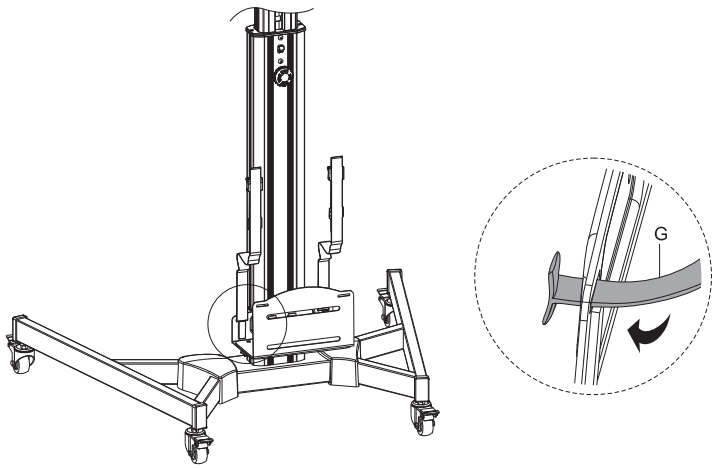

Step 16
Securing the PC in the PC Mount

• Pass the end of the PC Straps through the two short horizontal slots on the outer half of the PC Mount. Thread the straps through the slide buckle on the strap and leaving the straps loose enough to insert the PC.
• Insert the PC into the PC Mount and adjust the width of the PC mount to fit your device. To do so loosen the hand knobs on the underside of the mount and push or pull the halves to fit snugly against the sides of your PC.
• Tighten the straps by pulling all the slack through the first slide buckle (shown in magnified bubble 3), then insert the ends of the strap through the cam buckle (shown in magnified bubble 4) then push the flap of the buckle down to latch the straps in place. Adjust the height of the cable management clip as needed.

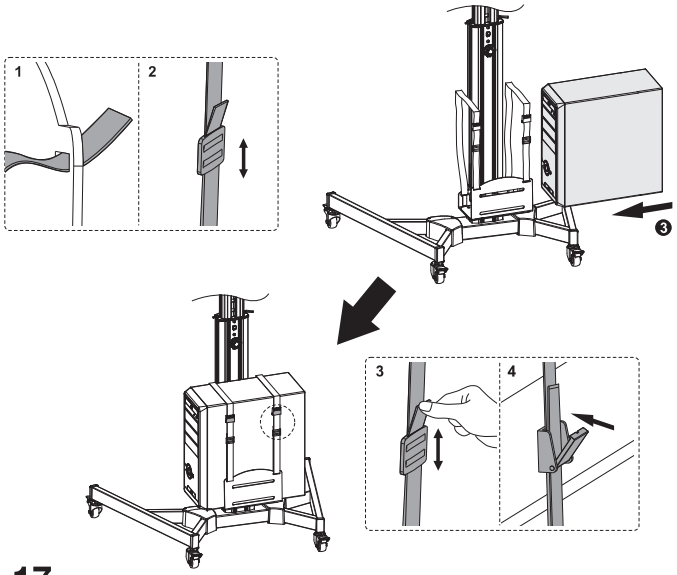

Step 17
Final Adjustments

• The monitor can be tilted up or down 30 degrees and can be rotated 180 degrees to change the orientation of the monitor from landscape to portrait orientation.
• For cable management pass the cables through the opening behind the monitor mount as shown here so that they exit through the base of the column.
• The Hex Wrenches can be stored on the holes on the sides of the column for easy access and adjustments.
• Push the brake lever down on the casters to prevent the cart from rolling and pull them up to allow the wheels to turn.

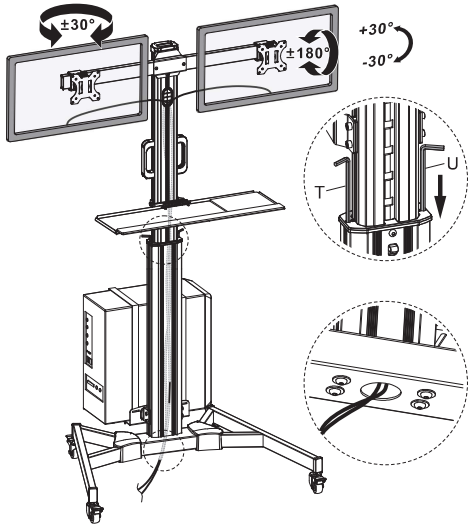

Visit us at **www.mount-it.com** for product registration and warranty information.

Our US based customer service team is standing by to answer any questions you have about your Mount-It! product.

Available by phone **Monday - Friday from 8:00am to 4:00pm** PST.

Chat live with an agent on our website!

support@mount-it.com

(855) 925-5668

www.mount-it.com